Allmand™

Brighter. Warmer. Safer.

Portable Industrial Heaters

Portable Light Towers

Portable Light Stands

Solar Flashing Arrow Boards

en Parts Manual
NIGHT-LITE™ V-SERIES

Not for Reproduction

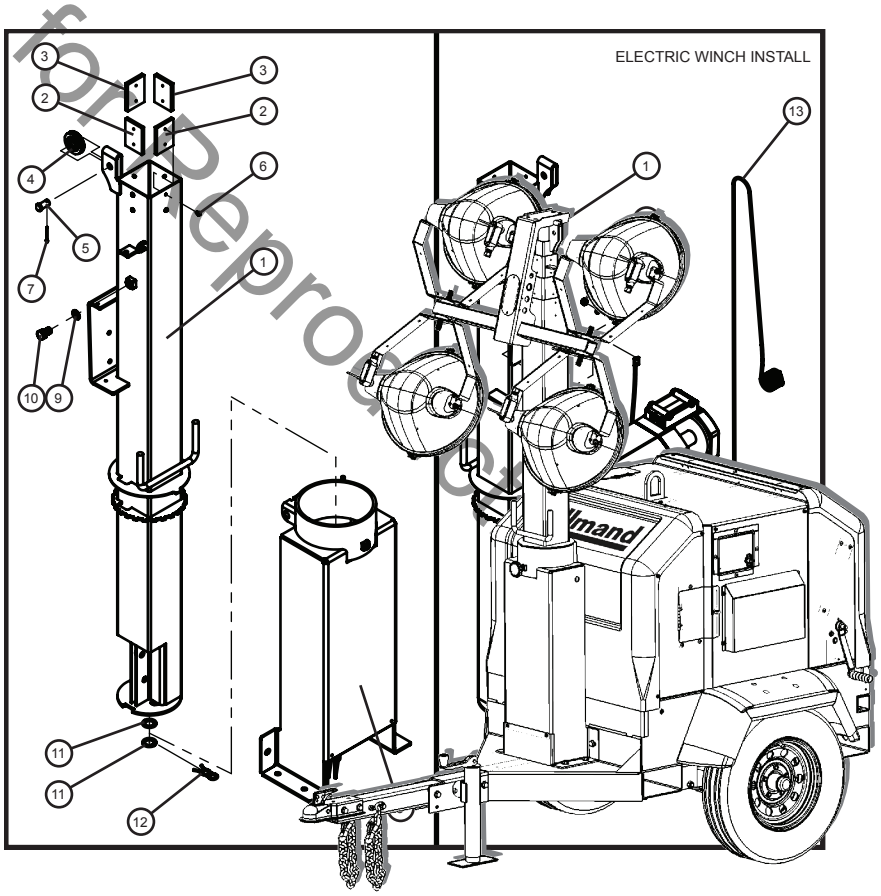

Copyright © 2017 Allmand Bros., Inc.
Holdrege, NE, USA. All rights reserved.

Part No.: 112140
Revision: A
Serial No.: 39-000001 and UP

LIGHT TOWER APP

Download on the App Store

GET IT ON Google Play

Reliability, Performance, and Integrity Since 1938

www.allmand.com

TABLE OF CONTENTS

1.0 AXLE/TONGUE/OUTRIGGERS

Axle and Fender Group .....(1.1)
Tongue Install Group .....(1.2)
Tongue Coupler Options .....(1.3)
Outriggers Group .....(1.4)

2.0 TRAILER PARTS GROUP

Trailer Base Parts .....(2.1)
Air Inlet Cover .....(2.2)
Liftbow .....(2.3)
Manual Canister .....(2.4)
Trailer Lighting .....(2.5)

3.0 VERTICAL TOWER GROUP

Vertical Tower Pivot Support .....(3.1)
Manual Vertical Tower Section 1 .....(3.2)
Electric Winch Vertical Tower Section 1 .....(3.3)
Vertical Tower Section 2 .....(3.4)
Vertical Tower Section 3 .....(3.5)
Vertical Tower Section 4 .....(3.6)
Vertical Tower Round Section and Light Bar .....(3.7)
Manual Tower Winch Install Group .....(3.8)
Vertical Tower Cord .....(3.9)

4.0 LAMP AND BALLAST GROUP

1250W Lamps with 60Hz 120V Ballasts .....(4.1)
1250W 60Hz 120V Ballast Box Assembly Group .....(4.2)
1000W Lamps with 60Hz 120V Ballasts .....(4.3)
1000W 60Hz 120V Ballast Box Assembly Group .....(4.4)
1000W Lamps with 50Hz 120V Ballasts .....(4.5)
1000W 50Hz 120V Ballast Box Assembly Group .....(4.6)

Not for Reproduction

©2017 Allmand™ Bros., Inc.

TABLE OF CONTENTS

4.0 LAMP AND BALLAST GROUP (Continued)

LED Lamps with LED Drivers Group .....(4.7)
LED Drivers Assembly Group .....(4.8)
SHO and LED Light Fixtures .....(4.9)
SHO Light Assembly Group .....(4.10)
SHO Light SAF-T-Visor Group .....(4.11)

5.0 CONTROL BOX AND BREAKER BOX GROUP

SLS Key Start Control Box .....(5.1)
SLS Harness Control Panel .....(5.2)
LSC Control Box .....(5.3)
LSC Harness Control Panel .....(5.4)
Electric Winch Control .....(5.5)
Circuit Breaker Box .....(5.6)
20A GFCI and 30A Twistlock Outlets Install Group .....(5.7)
30A RV Plug Adapter .....(5.8)
Emergency Stop .....(5.9)

6.0 ENGINE/BATTERY/FUEL TANK

Engine Mounting Group .....(6.1)
Coolant Reservoir Tank .....(6.2)
Kubota Engine Assembly Group .....(6.3)
Kubota Oil Line .....(6.4)
Mitsubishi Engine Assembly Group .....(6.5)
Mitsubishi Oil Line .....(6.6)
Engine Ground Strap .....(6.7)
Battery Install Group .....(6.8)
Fuel Tank Group .....(6.9)
Fuel Sender .....(6.10)
Kubota Fuel Lines .....(6.11)
Mitsubishi Fuel Lines .....(6.12)

Not for Reproduction

©2017 Allmand™ Bros., Inc.

TABLE OF CONTENTS

7.0 GENERATOR GROUP

Coliseum 6/8kW 50/60Hz Generator .....(7.1)
6/4 Generator Cord Install Group .....(7.2)

8.0 DECALS

Left Side Decals .....(8.1)
Left Side Door Panels and Back Side Decals .....(8.2)
Right Side Decals .....(8.3)
Front Side Decals .....(8.4)
Top Side Decals .....(8.5)
Interior Decals .....(8.6)
Wordless Left Side Decals .....(8.7)
Wordless Left Side Door Panels and Back Side Decals .....(8.8)
Wordless Right Side Decals .....(8.9)
Wordless Front Side Decals .....(8.10)
Wordless Top Side Decals .....(8.11)
Wordless Interior Decals .....(8.12)
CSA Decals .....(8.13)
Electrical Information Decals .....(8.14)
LSC Autostart Decal .....(8.15)

Not for Reproduction

©2017 Allmand™ Bros., Inc.

Not for Reproduction

PAGE LEFT BLANK
INTENTIONALLY

©2017 Allmand™ Bros., Inc.

1.1 - Axle and Fender Group

SN 39-000001 and UP

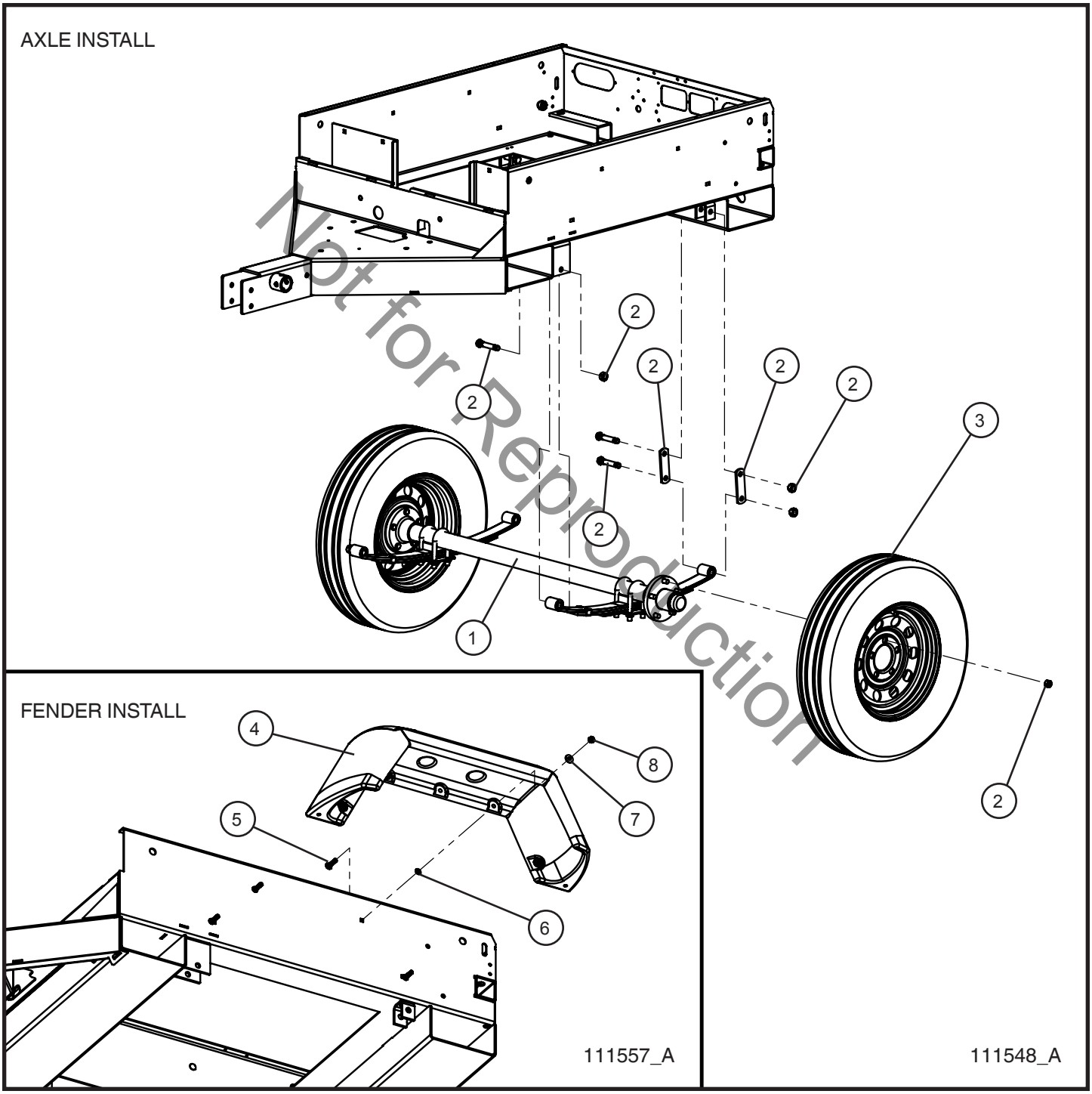

Not for Reproduction

©2017 Allmand™ Bros., Inc.

1.1 - Axle and Fender Group

SN 39-000001 and UP

Item	Part No.	Part Description	Qty.
1	107128	AXLE 13” HUBS	1
2	102106	AXLE HARDWARE KIT LONG	1
3	112801	13” WHEEL/TIRE ASSEMBLY	2
4	650297	FENDER 13 INCH MOLDED EMBEDDED DECAL	2
5	053023	5/16-18 x 1 1/2 CARRIAGE BOLT PL	8
6	045217	5/16 PUSH NUT	8
7	047010	5/16 FLAT WASHER PL	8
8	044031	5/16-18 KEPS HEX NUT PL	8

Not for Reproduction

©2017 Allmand™ Bros., Inc.

1.2 - Tongue Install Group

SN 39-000001 and UP

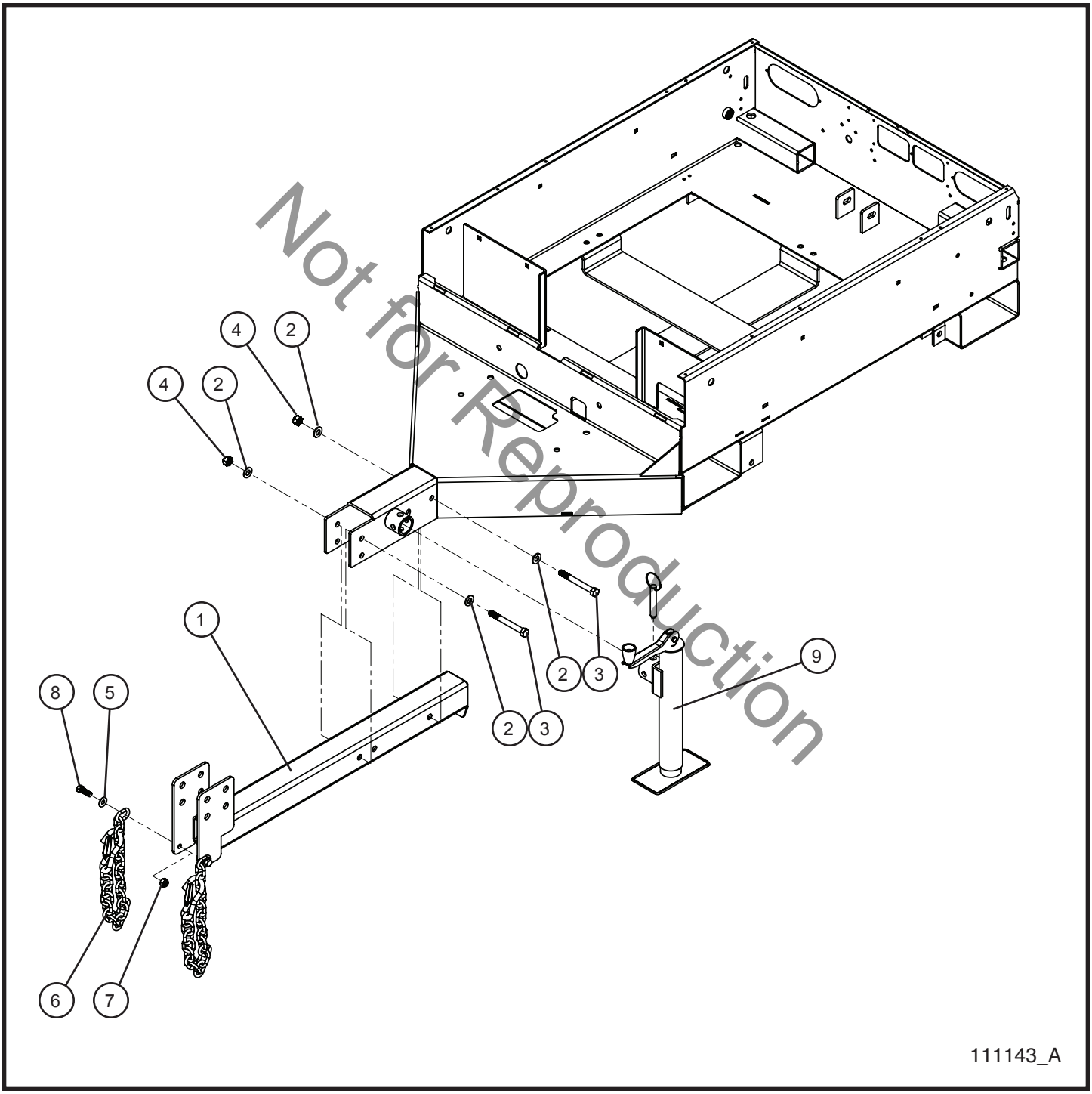

Not for Reproduction

©2017 Allmand™ Bros., Inc.

1.2 - Tongue Install Group

SN 39-000001 and UP

Item	Part No.	Part Description	Qty.
1	111146P	TONGUE FOLDING REVERSIBLE COUPLER	1
2	047025	1/2 FLAT WASHER PL	4
3	046225	1/2-13 x 4 1/2 HEX HEAD CS GR5 PL	2
4	044048	1/2-13 NYLOCK HEX NUT PL	2
5	047015	3/8 FLAT WASHER PL	2
6	049040	SAFETY CHAIN SINGLE CLASS III	2
7	044043	7/16-14 NYLOCK HEX NUT PL	2
8	046159	7/16-14 x 1 1/4 HEX HEAD CS GR5 PL	2
9	108726	TOP CRANK JACK TUBE JACK	1

Not for Reproduction

©2017 Allmand™ Bros., Inc.

1.3 - Tongue Coupler Options

SN 39-000001 and UP

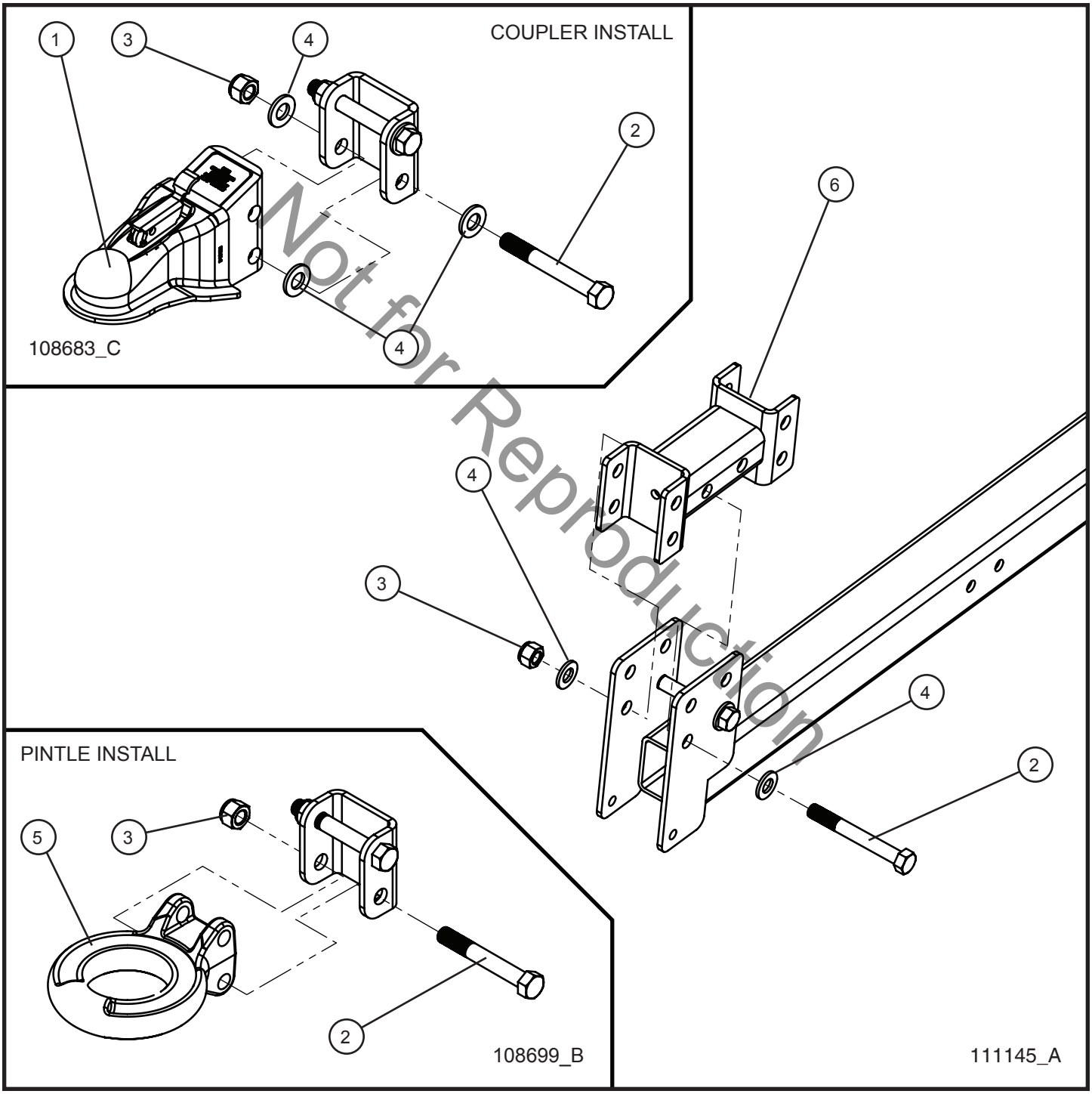

Not for Reproduction

©2017 Allmand™ Bros., Inc.

1.3 - Tongue Coupler Options

SN 39-000001 and UP

Item	Part No.	Part Description	Qty.
1	109977	COUPLER BALL 2.00 ADJUSTABLE STAMPED	1
	109976	COUPLER BALL 2.313 ADJUSTABLE STAMPED	1
2	046255	5/8-11 x 5 HEX HEAD CS GR5 PL	4
3	044053	5/8-11 NYLOCK HEX NUT PL	4
4	047031	5/8 FLAT WASHER HDND PL	10
5	106720	RING PINTLE 3.00 ADJUSTABLE	1
6	111148P	REVERSIBLE COUPLER TONGUE MOUNT	1

Not for Reproduction

©2017 Allmand™ Bros., Inc.

1.4 - Outriggers Group

SN 39-000001 and UP

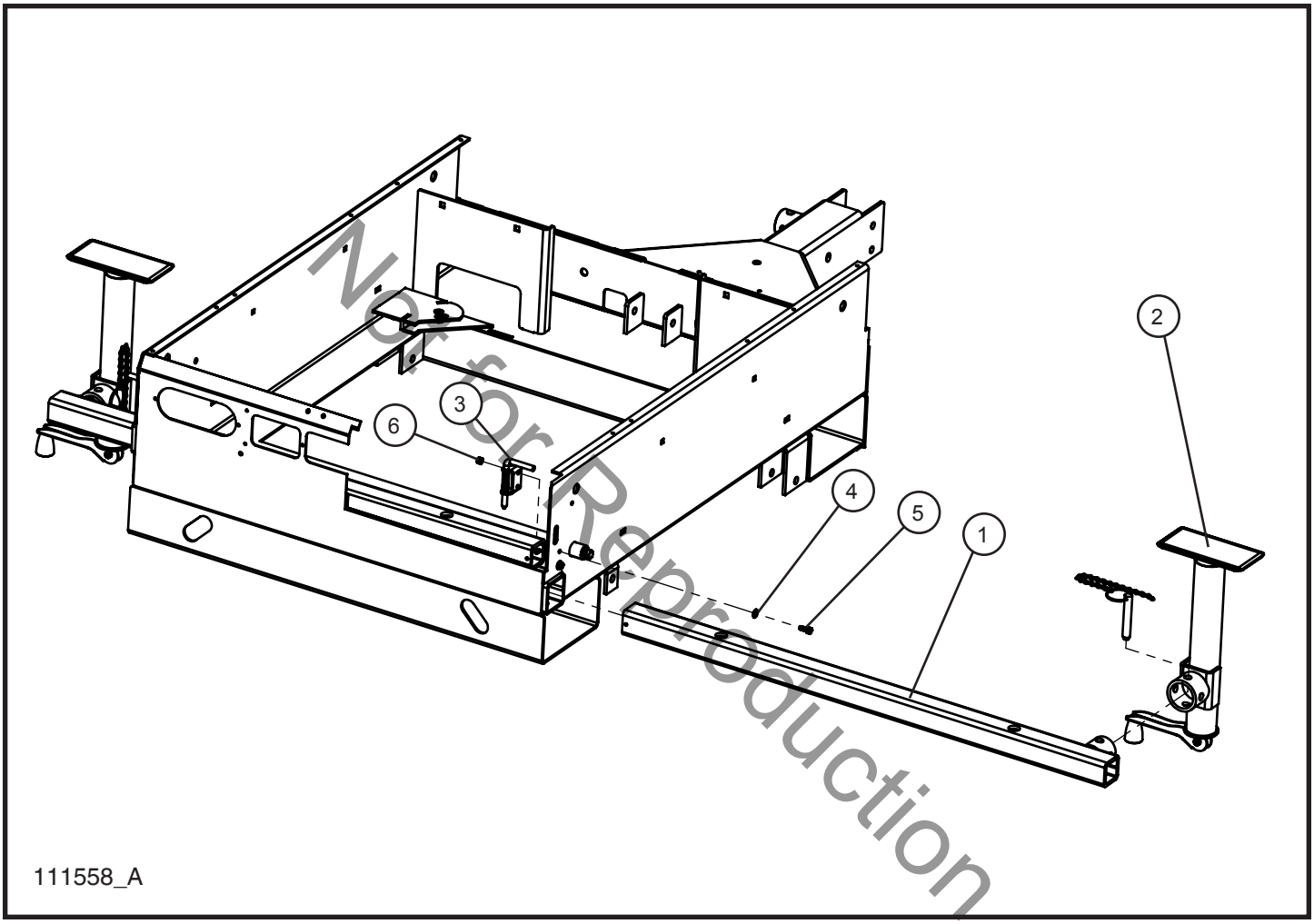

Not for Reproduction

©2017 Allmand™ Bros., Inc.

1.4 - Outriggers Group

SN 39-000001 and UP

Item	Part No.	Part Description	Qty.
1	109855P	NLV OUTRIGGER WELDMENT	2
2	108726	TOP CRANK JACK TUBE MOUNT	2
3	650723	RETENSION PIN RIGHT/LEFT	2
4	047005	1/4 FLAT WASHER PL	4
5	046010	1/4-20 x 3/4 HEX HEAD CS GR5 SS	4
6	044023	1/4-20 NYLOCK HEX NUT PL	4

Not for Reproduction

©2017 Allmand™ Bros., Inc.

2.1 - Trailer Base Parts (1 of 3)

SN 39-000001 and UP

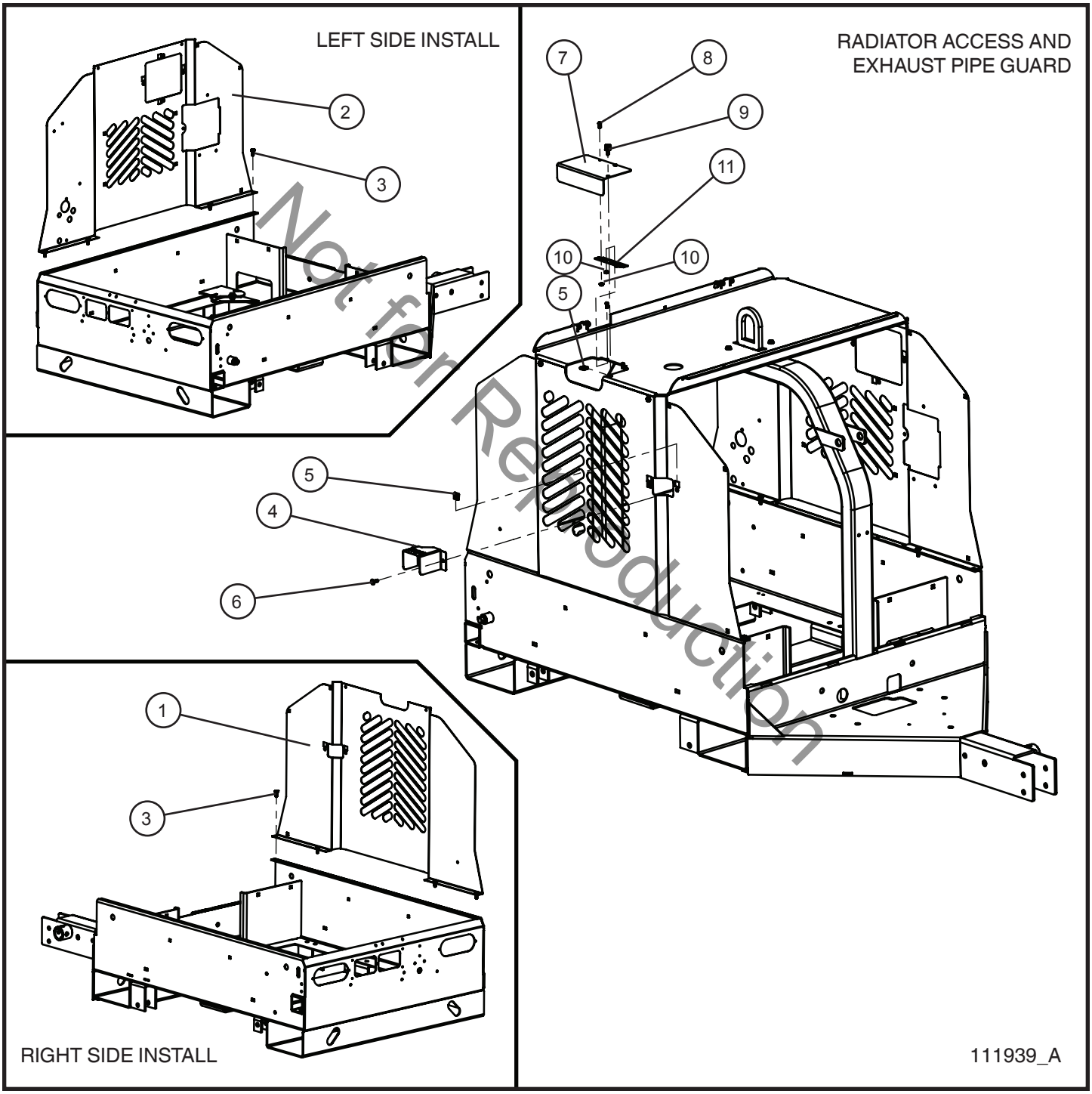

Not for Reproduction

©2017 Allmand™ Bros., Inc.

2.1 - Trailer Base Parts (1 of 3)

SN 39-000001 and UP

Item	Part No.	Part Description	Qty.
1	109861P	PANEL SIDE RIGHT	1
2	109862P	PANEL SIDE LEFT	1
3	041070	1/4-20 x 3/4 SL-HEX WASHER HEAD MS TP F	8
4	111945P	EXHAUST PIPE GUARD	1
5	045216	1/4-20 TINNERMAN NUT	3
6	041050	1/4-20 x 3/4 PH-TRUSS HEAD MS SS MACHINE SCREW	2
7	109871P	PANEL ACCESS RADIATOR CAT	1
8	041021	#10-24 x 1/2 PH-ROUND HEAD MS PL	4
9	102435	KNURLED SHMS w/ RETAINER	1
10	044016	#10-24 KEPS HEX NUT PL	4
11	045023	HINGE APF & ALT BOARDS	1

Not for Reproduction

©2017 Allmand™ Bros., Inc.

2.1 - Trailer Base Parts (2 of 3)

SN 39-000001 and UP

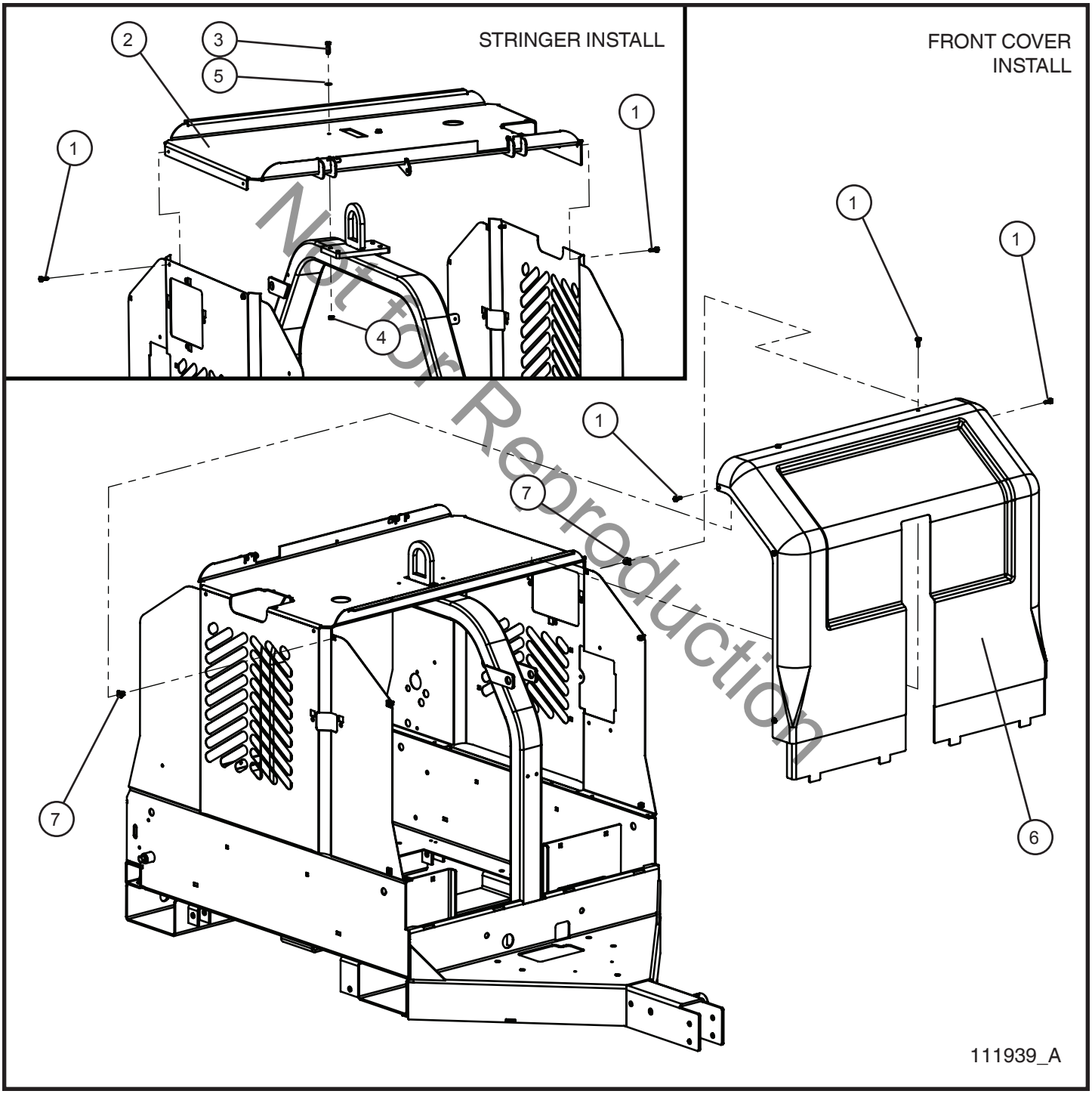

Not for Reproduction

©2017 Allmand™ Bros., Inc.

2.1 - Trailer Base Parts (2 of 3)

SN 39-000001 and UP

Item	Part No.	Part Description	Qty.
1	041070	1/4-20 x 3/4 SL-HEX WASHER HEAD MS TP F	12
2	111454P	NLV STRINGER WELMENT	1
3	046015	1/4-20 x 1 HEX HEAD CS GR5 PL	2
4	044021	1/4-20 KEPS HEX NUT PL	2
5	047009	1/4 FLAT WASHER SAE SS	2
6	109875P	WELDMENT COVER FRONT	1
7	105408	GROMMET NUT DOUBLE SPLIT	6

Not for Reproduction

©2017 Allmand™ Bros., Inc.

2.1 - Trailer Base Parts (3 of 3)

SN 39-000001 and UP

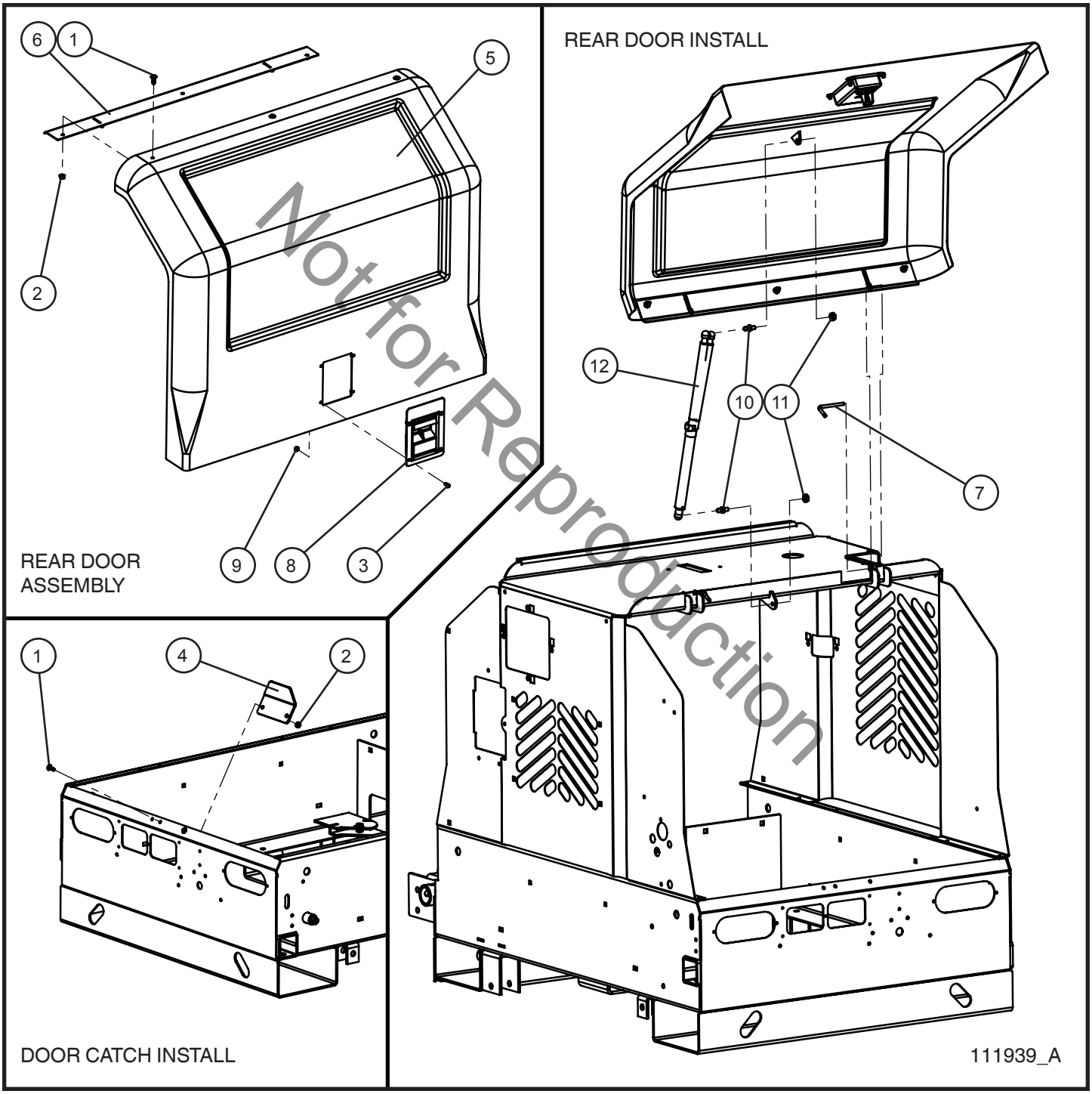

Not for Reproduction

©2017 Allmand™ Bros., Inc.

2.1 - Trailer Base Parts (3 of 3)

SN 39-000001 and UP

Item	Part No.	Part Description	Qty.
1	041050	1/4-20 x 3/4 PH-TRUSS HEAD MS SS MACHINE SCREW	5
2	044021	1/4-20 KEPS HEX NUT PL	5
3	041021	#10-24 x 1/2 PH-ROUND HEAD MS PL	4
4	109870P	PLATE CATCH SLAM LATCH	1
5	109873P	WELDMENT COVER REAR	1
6	111457P	WELDMENT REAR COVER HINGE	1
7	111456	PIN HINGE	2
8	680459	SLAM LATCH	1
9	044018	#10-24 NYLOCK HEX NUT PL	4
10	330437	BALL STUD M10	2
11	044090	5/16-18 TOP LOCK HEX NUT PL	2
12	105245	CYLINDER GAS SPRING LOCKING	1

Not for Reproduction

©2017 Allmand™ Bros., Inc.

2.2 - Air Inlet Cover

SN 39-000001 and UP

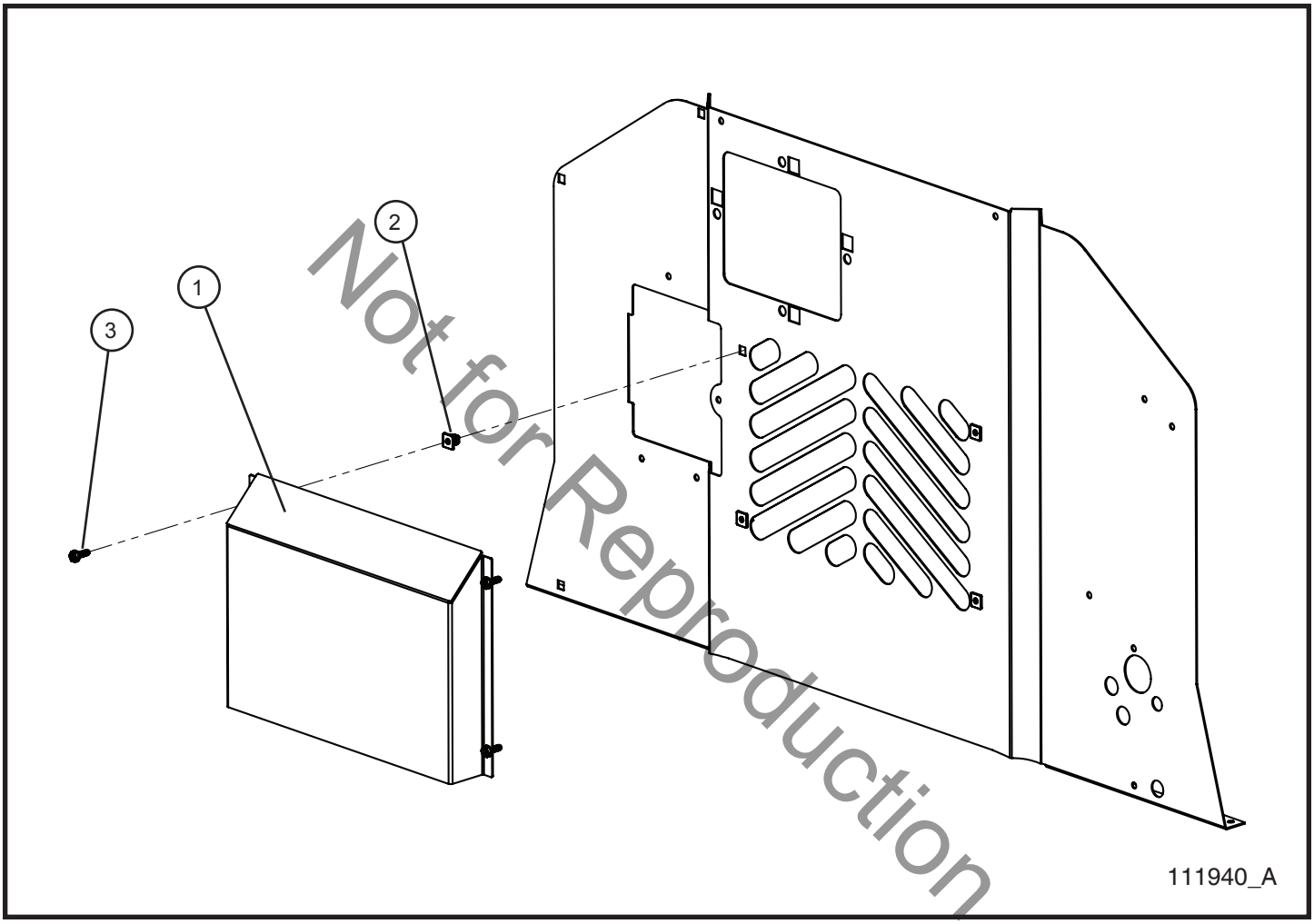

Not for Reproduction

©2017 Allmand™ Bros., Inc.

2.2 - Air Inlet Cover

SN 39-000001 and UP

Item	Part No.	Part Description	Qty.
1	109863P	PANEL COVER AIR INLET	1
2	105408	GROMMET NUT DOUBLE SPLIT	4
3	041070	1/4-20 x 3/4 SL-HEX WASHER HEAD MS TP F	4

Not for Reproduction

©2017 Allmand™ Bros., Inc.

2.3 - Lift Bow

SN 39-000001 and UP

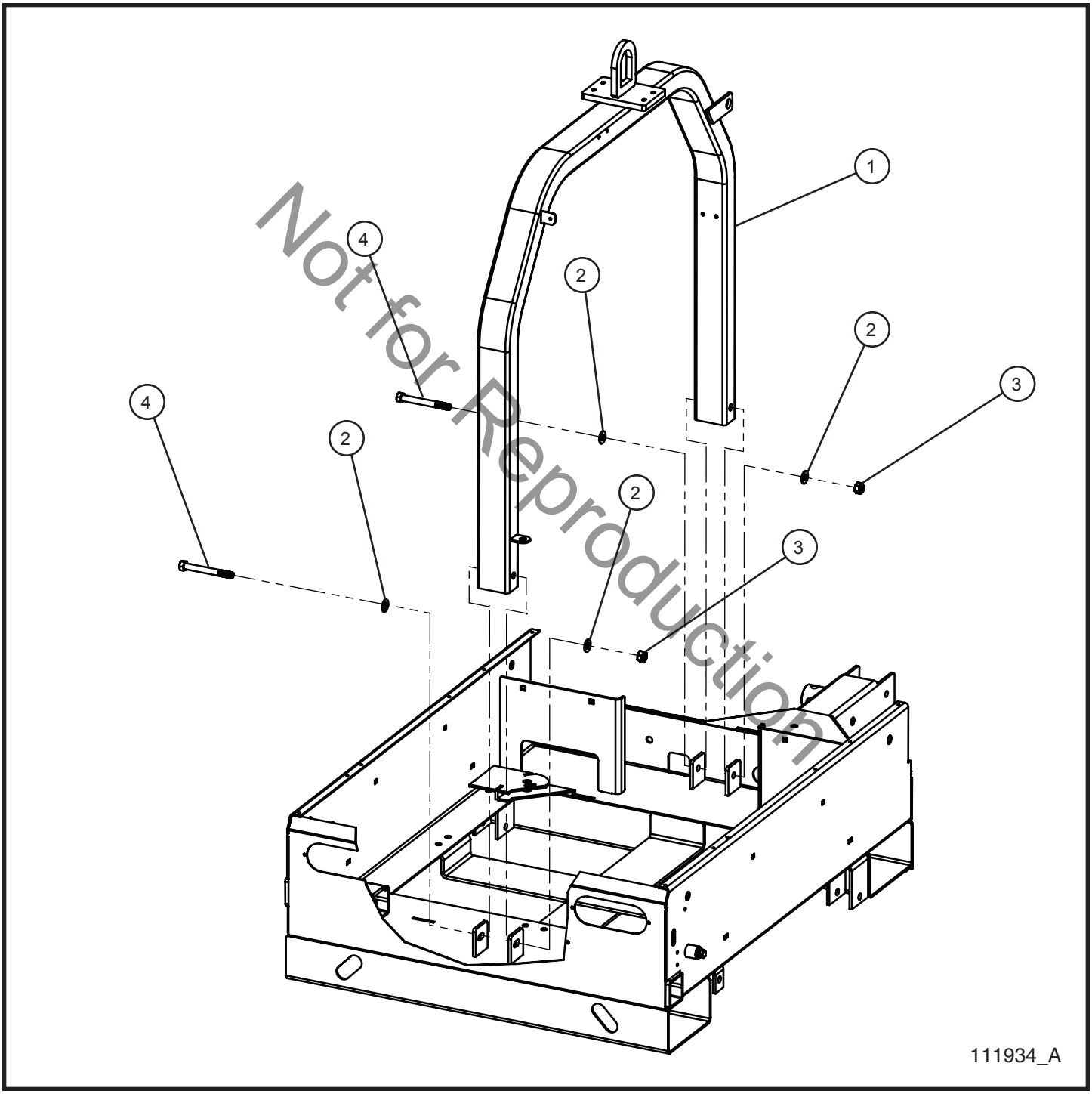

Not for Reproduction

©2017 Allmand™ Bros., Inc.

2.3 - Lift Bow

SN 39-000001 and UP

Item	Part No.	Part Description	Qty.
1	109837P	LIFT BOW NLV	1
2	047025	1/2 FLAT WASHER PL	4
3	044048	1/2-13 NYLOCK HEX NUT PL	2
4	046225	1/2-13 x 4 1/2 HEX HEAD CS GR5 PL	4

Not for Reproduction

©2017 Allmand™ Bros., Inc.

2.4 - Manual Canister

SN 39-000001 and UP

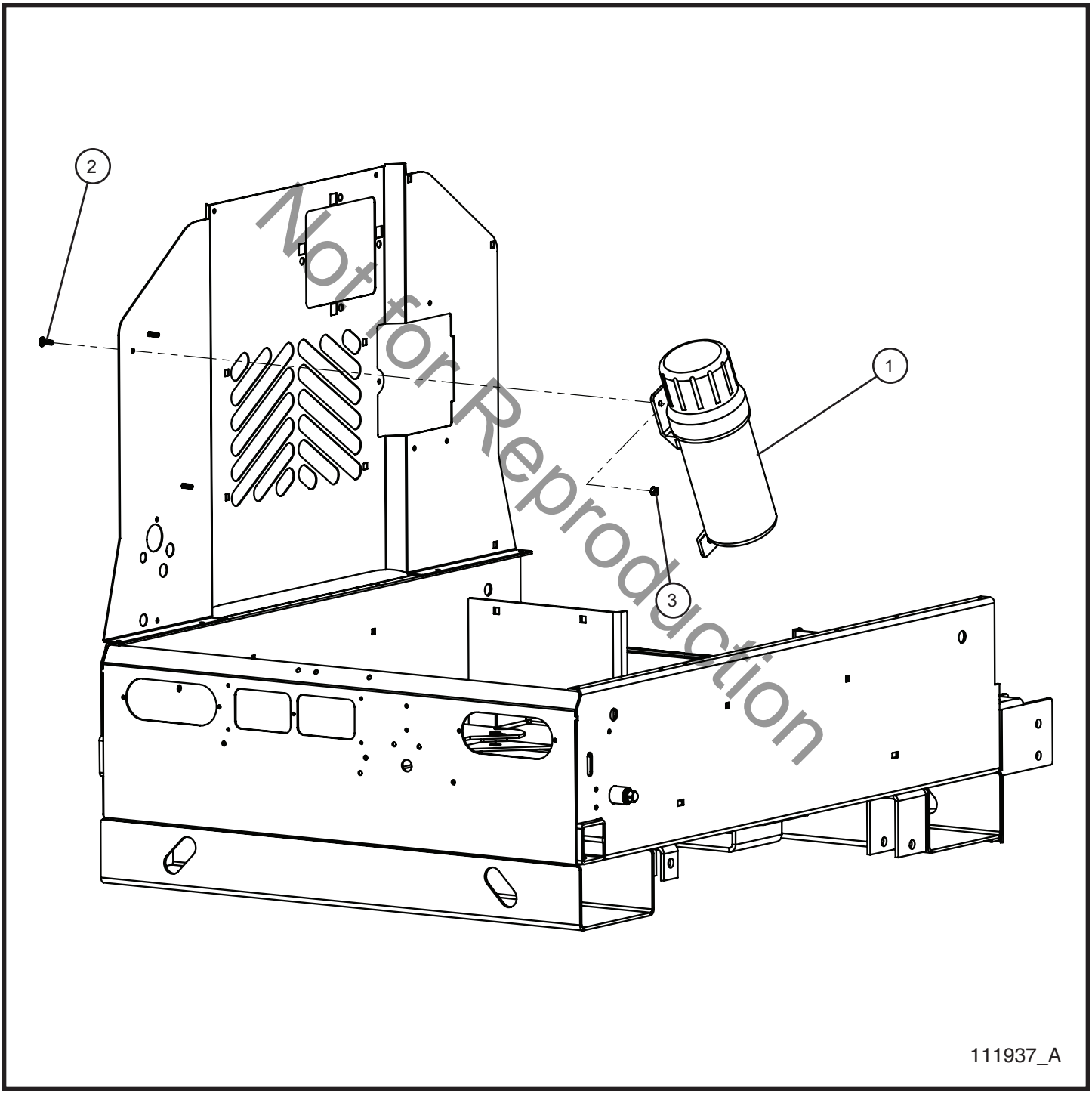

Not for Reproduction

©2017 Allmand™ Bros., Inc.

2.4 - Manual Canister

SN 39-000001 and UP

Item	Part No.	Part Description	Qty.
1	106916	MEGA CANISTER PRODUCT MANUAL	1
2	041050	1/4-20 x 3/4 PH-TRUSS HEAD MS SS MACHINE SCREW	3
3	044021	1/4-20 KEPS HEX NUT PL	3

Not for Reproduction

©2017 Allmand™ Bros., Inc.

2.5 - Trailer Lighting

SN 39-000001 and UP

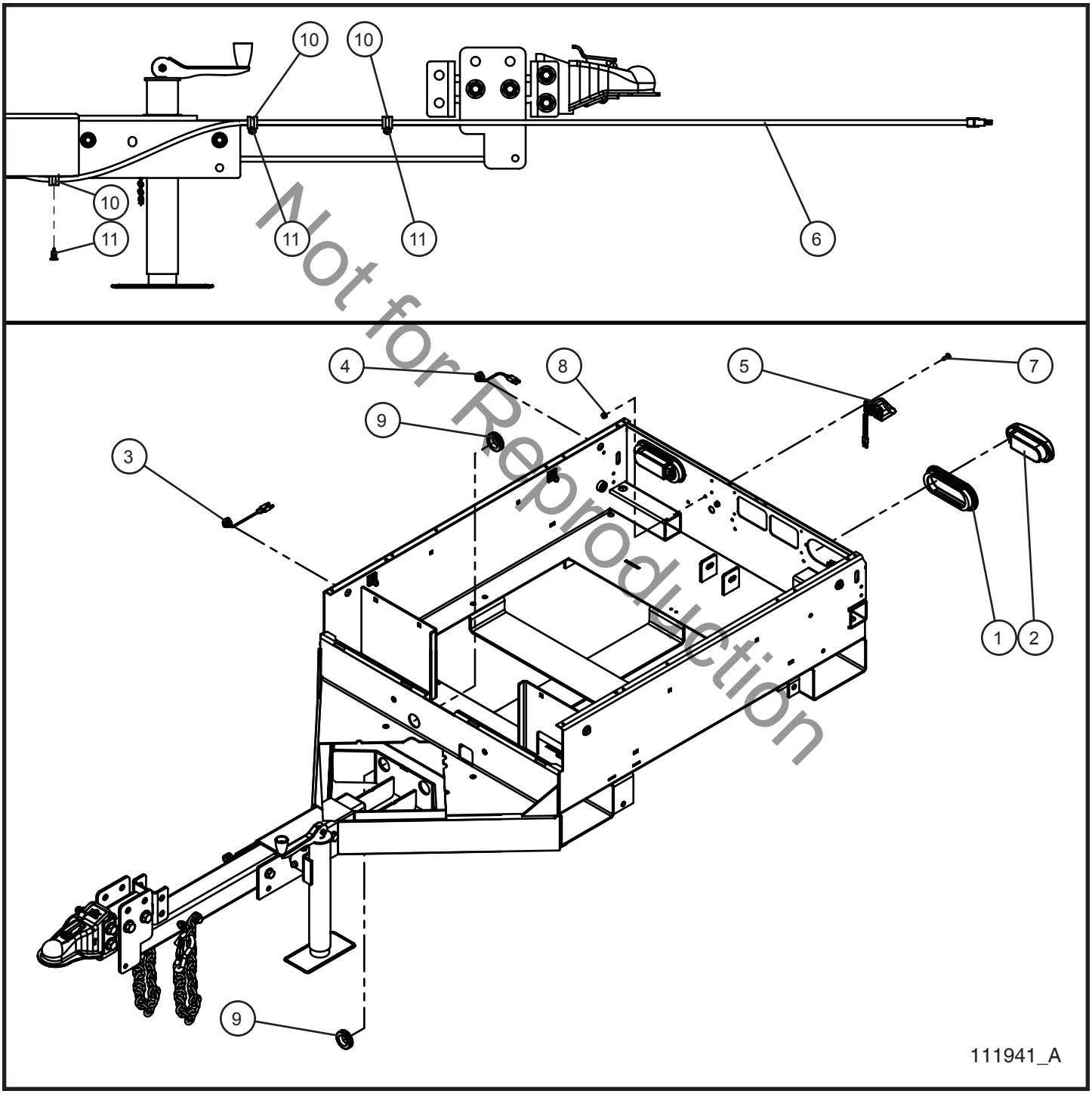

Not for Reproduction

©2017 Allmand™ Bros., Inc.

2.5 - Trailer Lighting

SN 39-000001 and UP

Item	Part No.	Part Description	Qty.
1	102825	OVAL LAMP GROMMET	2
2	102721	LED TAIL LAMP STOP TURN	2
3	106212	LIGHT LED MARKER AMBER	2
4	106211	LIGHT LED MARKER RED	2
5	107605	MOUNT LED LIGHT CLEAR	1
6	107857	LONG TONGUE TAIL LIGHT HARNESS	1
7	041050	1/4-20 x 3/4 PH-TRUSS HEAD MACHINE SCREW	2
8	044021	1/4-20 KEPS HEX NUT PL	2
9	650542	1 1/4 ID x 1 1/2 OD GROMMET	2
10	310212	#10 CUSH CLAMP 1/4 HOLE	3
11	110256	TRIM PANEL RETAINER	3
NS	107266	SCHEMATIC TAIL LIGHT HARNESS	1
NS	107489	HARNESS MARKER LIGHTS REAR	1
NS	107490	HARNESS MARKER LIGHTS FRONT	1
NS	107858	BASE HARNESS TAIL LIGHTS	1
NS	107861	TAIL LIGHT PIGTAIL SHORT SQUARE PLUG HARNESS	2
NS	107268	FRONT MARKER LIGHTS SCHEMATIC	1
NS	107493	REAR MARKER LIGHT SCHEMATIC	1

*NS - NOT SHOWN

Not for Reproduction

©2017 Allmand™ Bros., Inc.

3.1 - Vertical Tower Pivot Support

SN 39-000001 and UP

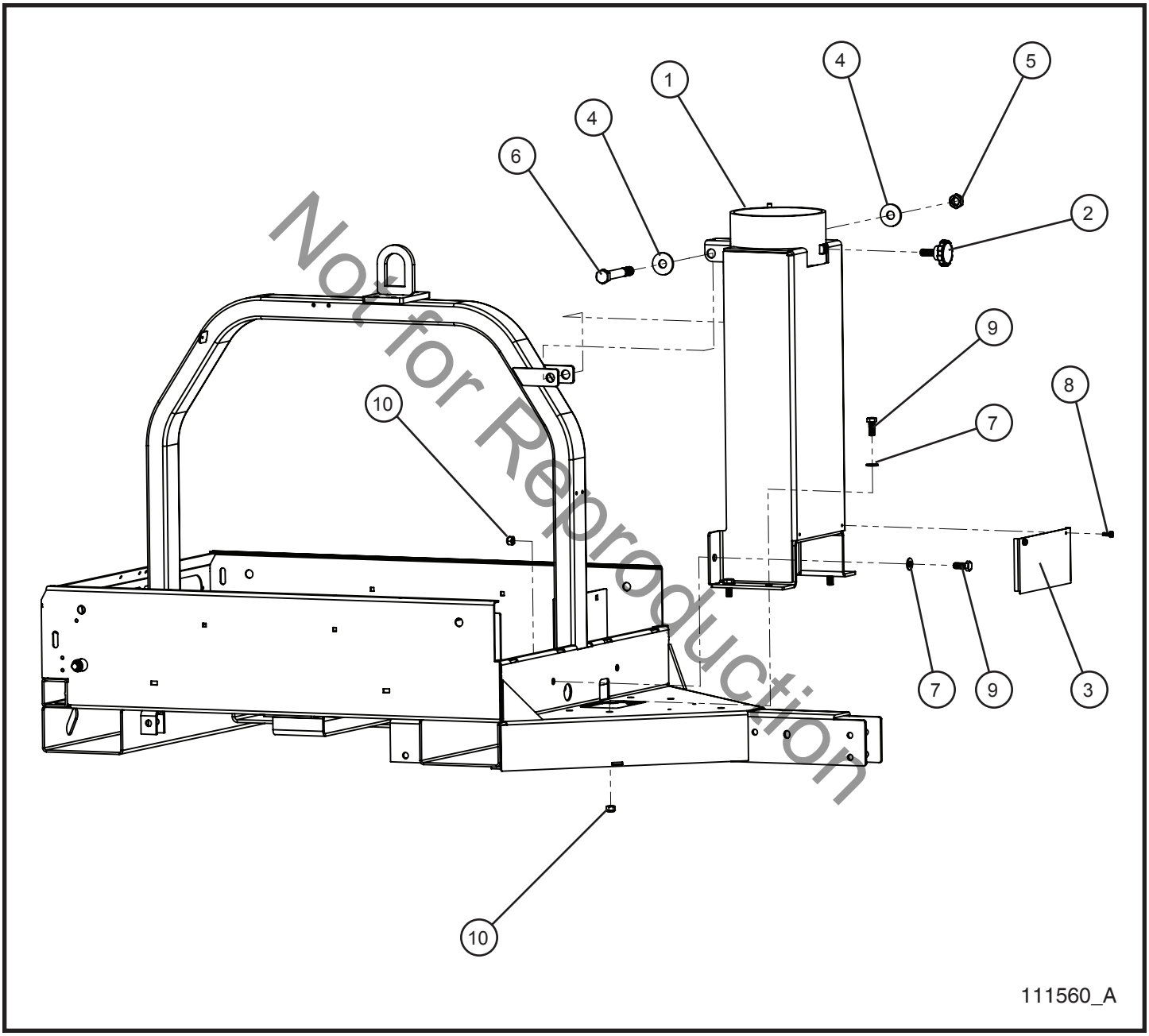

Not for Reproduction

©2017 Allmand™ Bros., Inc.

3.1 - Vertical Tower Pivot Support

SN 39-000001 and UP

Item	Part No.	Part Description	Qty.
1	110248P	PIVOT SECTION SUPPORT	1
2	620550	LOCKING KNOB	1
3	110220P	TOWER PULLEY PANEL	1
4	047035	3/4 FLAT WASHER PL	2
5	044059	3/4-16 JAM NUT	1
6	046272	STEEL CAT SCREW 3/4 x 5 1/2 GRADE 5	1
7	047025	1/2 FLAT WASHER PL	6
8	041070	1/4-20 x 3/4 SL-HEX WASHER HEAD MS TP F	2
9	046180	1/2-13 x 1 1/4 HEX HEAD CS GR5 PL	6
10	044043	7/16-14 NYLOCK HEX NUT PL	6

Not for Reproduction

©2017 Allmand™ Bros., Inc.

3.2 - Manual Vertical Tower Section 1

SN 39-000001 and UP

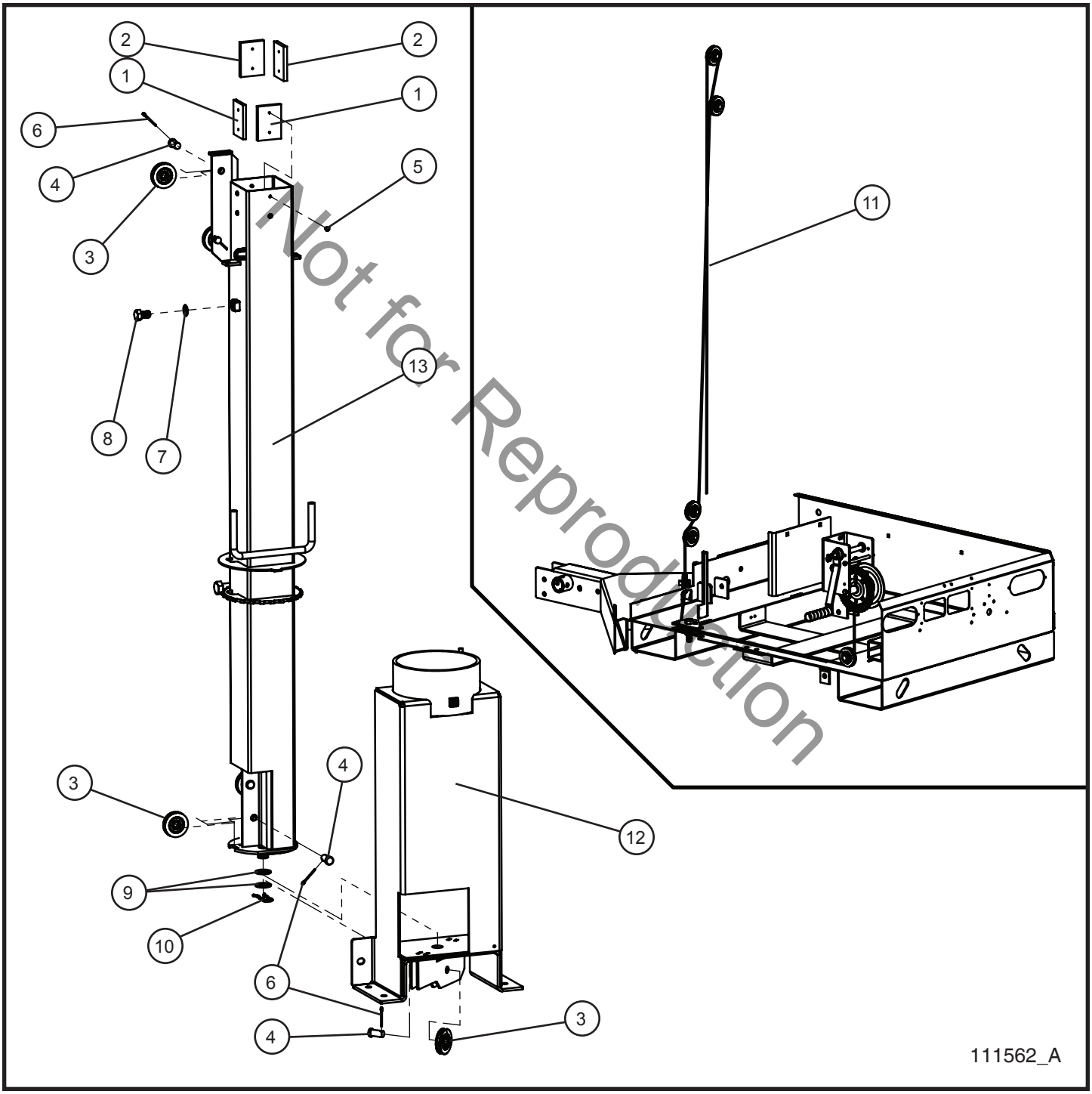

Not for Reproduction

©2017 Allmand™ Bros., Inc.

3.2 - Manual Vertical Tower Section 1

SN 39-000001 and UP

Item	Part No.	Part Description	Qty.
1	650110	.312 TOWER PAD	2
2	650109	.375 TOWER PAD	2
3	100160	2 1/2 PULLEY BALL BEARING	5
4	102906	5/8 x 1 1/4 CLEVIS PIN	5
5	041023	#10 x 3/8 PH-ROUND HEAD MS PL	8
6	045042	COTTER PIN 1/8 x 1 1/2	5
7	043100	5/8 INTL TOOTHLOCK WASHER PL	1
8	046242	5/8-11 x 1 HEX HEAD CS GR5 PL	1
9	047055	1” ID NARROW RIM PLATED MACHINE BUSHING	2
10	620545	3/4” HAIR PIN CLIP RATED	1
11	107365	WINCH CABLE	1
12	110248P	PIVOT SECTION SUPPORT	1
13	110335P	MANUAL WINCH TOWER WELDMENT	1
	110335-20	MANUAL WINCH TOWER WELDMENT - GALVANIZED	1

Not for Reproduction

©2017 Allmand™ Bros., Inc.

3.3 - Electric Winch Vertical Tower Section 1 (1 of 3)

SN 39-000001 and UP

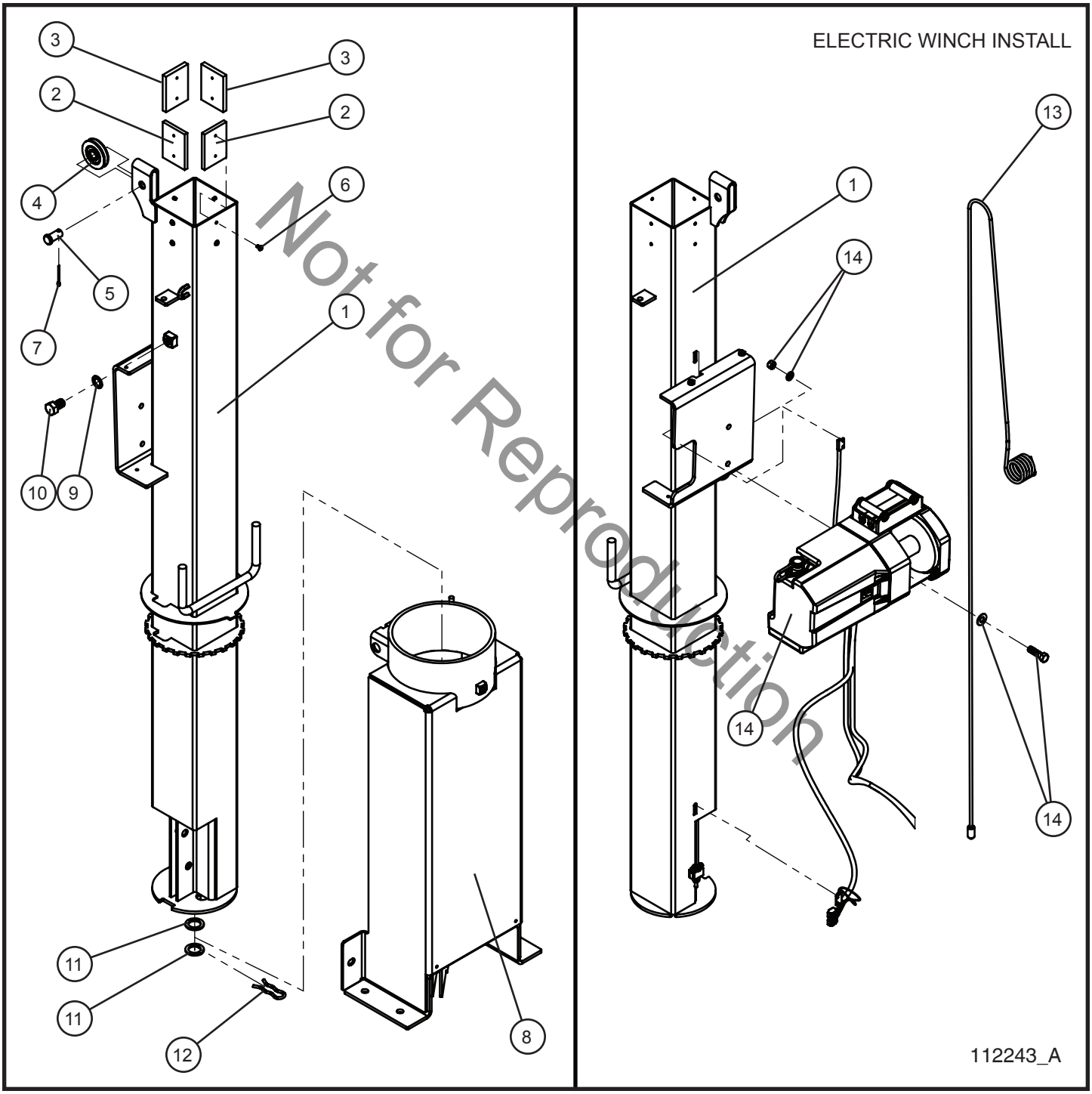

Not for Reproduction

©2017 Allmand™ Bros., Inc.

3.3 - Electric Winch Vertical Tower Section 1 (1 of 3)

SN 39-000001 and UP

Item	Part No.	Part Description	Qty.
1	109833P	ELECTRIC WINCH TOWER 5 INCH SECTION	1
	109833-20	ELECTRIC WINCH TOWER 5 INCH SECTION GALVANIZED	1
2	650110	.312 TOWER PAD	2
3	650109	.375 TOWER PAD	2
4	100160	2 1/2 PULLEY BALL BEARING	1
5	102906	5/8 x 1 1/4 CLEVIS PIN	1
6	041023	#10 x 3/8 PH-ROUND HEAD MS PL	8
7	045042	COTTER PIN 1/8 x 1 1/2	1
8	110248P	PIVOT SECTION SUPPORT	1
9	043100	5/8 INTL TOOTHLOCK WASHER PL	1
10	046242	5/8-11 x HEX HEAD CS GR5 PL	1
11	047055	1” ID NARROW RIM PLATED MACHINE BUSHING	2
12	620545	3/4” HAIR PIN CLIP RATED	1
13	109998	ELECTRIC WINCH CABLE	1
14	110022	ELECTRIC WINCH ASSEMBLY	1
	109992	ELECTRIC WINCH C1000 (WINCH ONLY)	1

Not for Reproduction

©2017 Allmand™ Bros., Inc.

3.3 - Electric Winch Vertical Tower Section 1 (2 of 3)

SN 39-000001 and UP

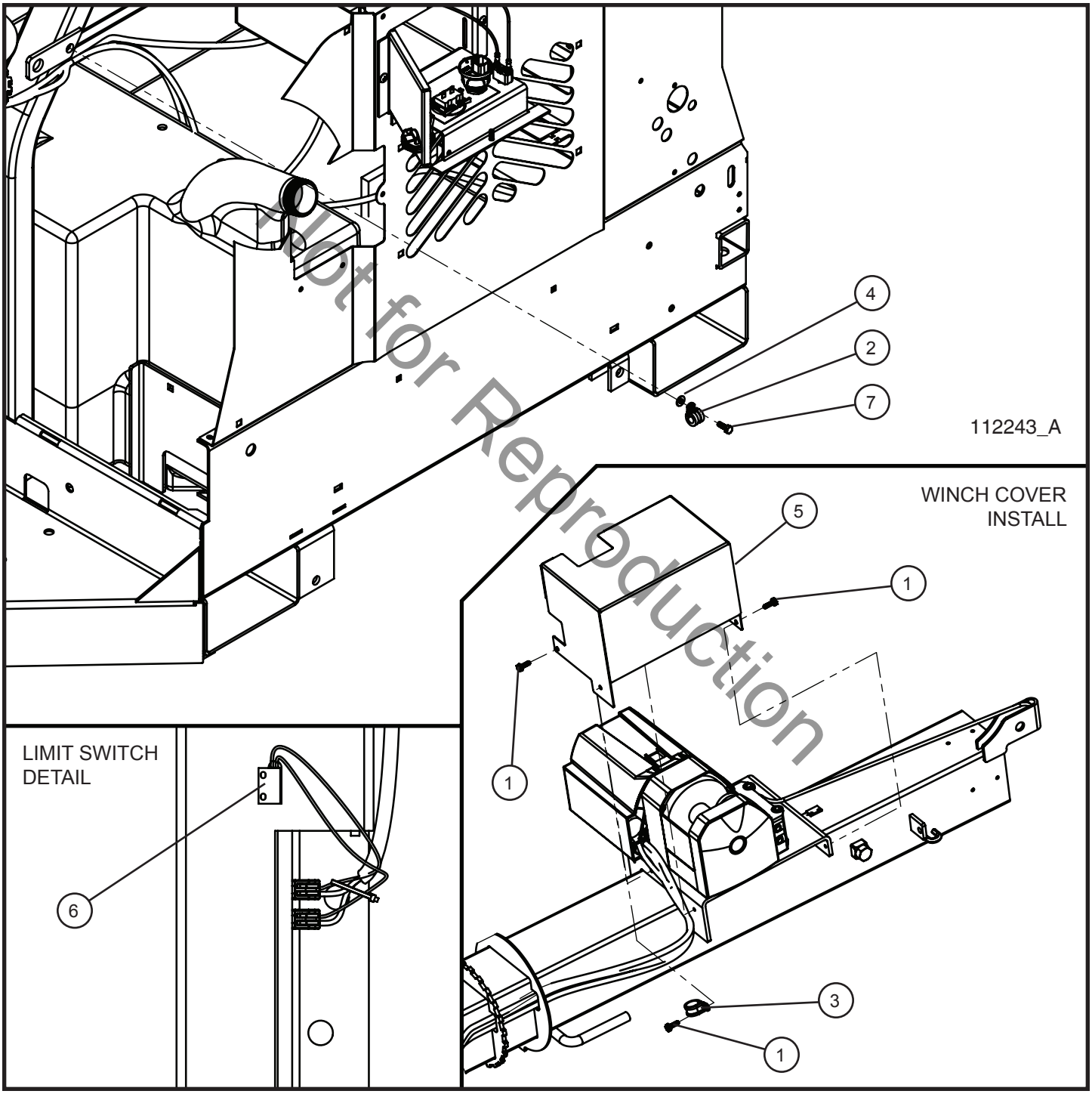

Not for Reproduction

©2017 Allmand™ Bros., Inc.

3.3 - Electric Winch Vertical Tower Section 1 (2 of 3)

SN 39-000001 and UP

Item	Part No.	Part Description	Qty.
1	041070	1/4-20 x 3/4 SL-HEX WASHER HEAD	4
2	310212	#10 CUSH CLAMP 1/4 HOLE	1
3	022024	#12 CUSH CLAMP	1
4	047005	1/4 FLAT WASHER PL	1
5	110214P	ELECTRIC WINCH COVER PLATE	1
6	109993	MAGNETIC LIMIT SWITCH	2
7	102573	1/4-20 x 3/4 HEX HEAD CS GR5 ZINC	1
NS	110044	16/2 ELECTRIC WINCH TO LIMIT SWITCH CORD	1
NS	110117	ELECTRIC WINCH SCHEMATIC	1

*NS - NOT SHOWN

Not for Reproduction

©2017 Allmand™ Bros., Inc.

3.3 - Electric Winch Vertical Tower Section 1 (3 of 3)

SN 39-000001 and UP

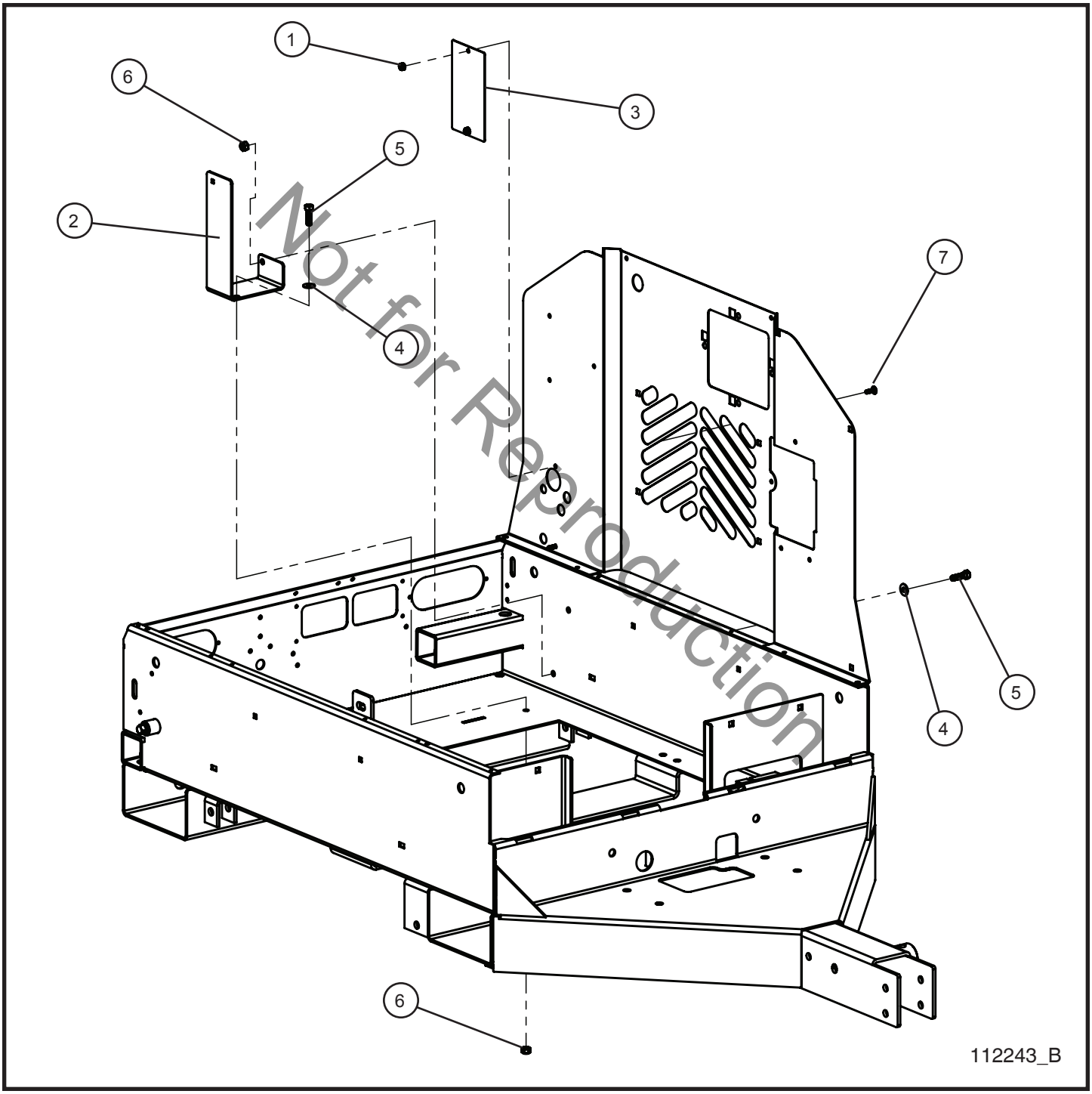

Not for Reproduction

©2017 Allmand™ Bros., Inc.

3.3 - Electric Winch Vertical Tower Section 1 (3 of 3)

SN 39-000001 and UP

Item	Part No.	Part Description	Qty.
1	044021	1/4-20 KEPS HEX NUT PL	2
2	111957P	HOLD DOWN BATTERY BRACKET	1
3	111953P	WINCH HOLE COVER PLATE	1
4	047010	5/16 FLAT WASHER PL	2
5	046115	3/8-16 x 1 1/4 HEX HEAD CS GR5 PL	2
6	044038	3/8-16 NYLOCK HEX NUT PL	2
7	041050	1/4-20 x 3/4 PHILLIPS TRUSS HEAD MACHINE SCREW	2

Not for Reproduction

©2017 Allmand™ Bros., Inc.

3.4 - Vertical Tower Section 2

SN 39-000001 and UP

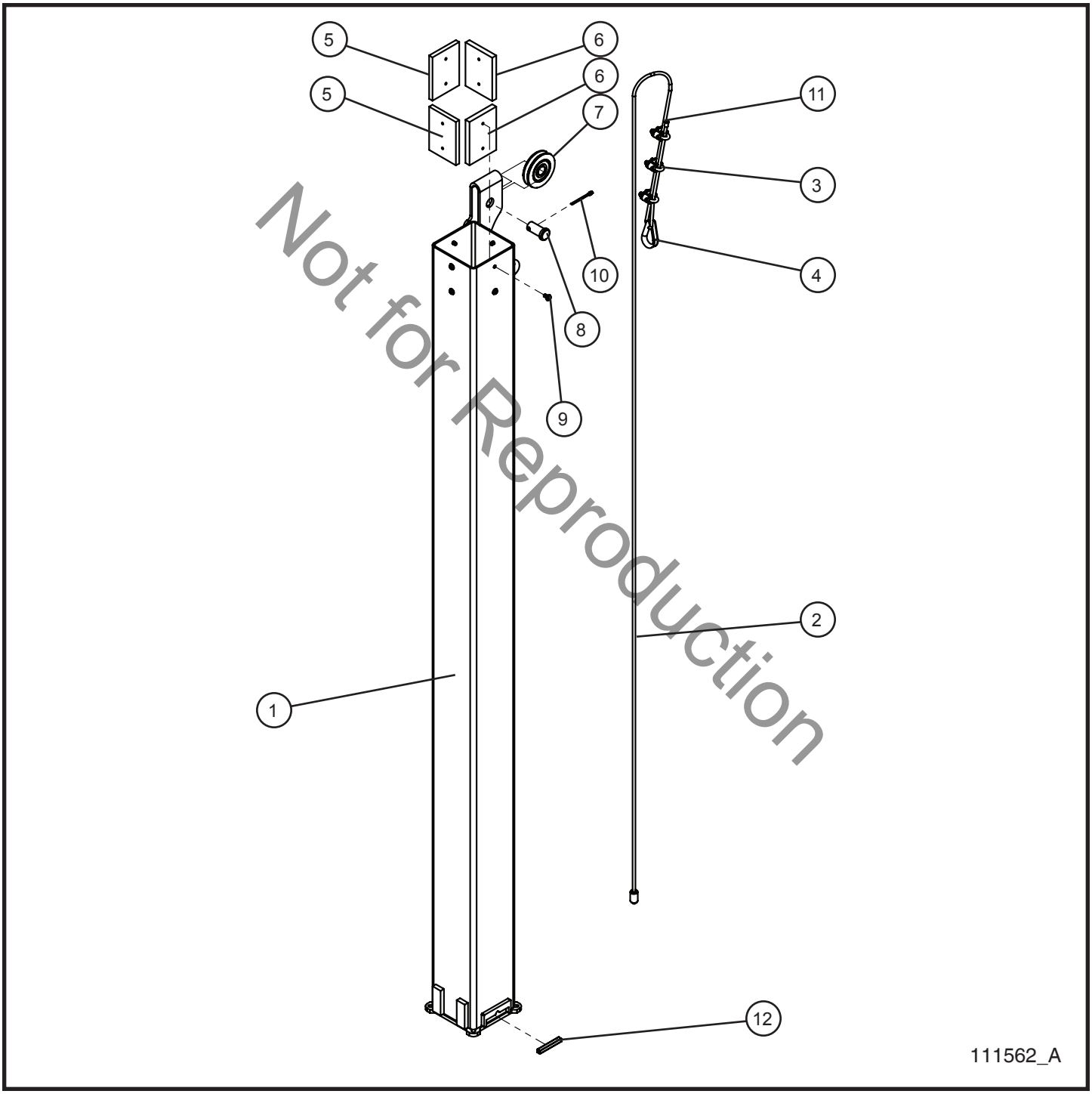

Not for Reproduction

©2017 Allmand™ Bros., Inc.

3.4 - Vertical Tower Section 2

SN 39-000001 and UP

Item	Part No.	Part Description	Qty.
1	107182P	TOWER WELDMENT 4 INCH SECTION	1
	107182-20	TOWER WELDMENT 4 INCH SECTION - GALVANIZED	1
2	320185	CABLE 3/16 STEEL 10’	1
3	620084	3/16 CABLE CLIP	3
4	045040	3/16 CABLE THIMBLE 3/16 WIRE ROPE	1
5	650110	.312 TOWER PAD	2
6	650109	.375 TOWER PAD	2
7	100160	2 1/2 PULLEY BALL BEARING	1
8	102906	5/8 x 1 1/4 CLEVIS PIN	1
9	041023	#10 x 3/8 PH-ROUND HEAD MS PL	8
10	045042	COTTER PIN 1/8 x 1 1/2	1
11	022150	FERRULE 10-12 AWG	1
12	109988	MAGNET 1/4 x 1/4 x 2	1

Not for Reproduction

©2017 Allmand™ Bros., Inc.

3.5 - Vertical Tower Section 3

SN 39-000001 and UP

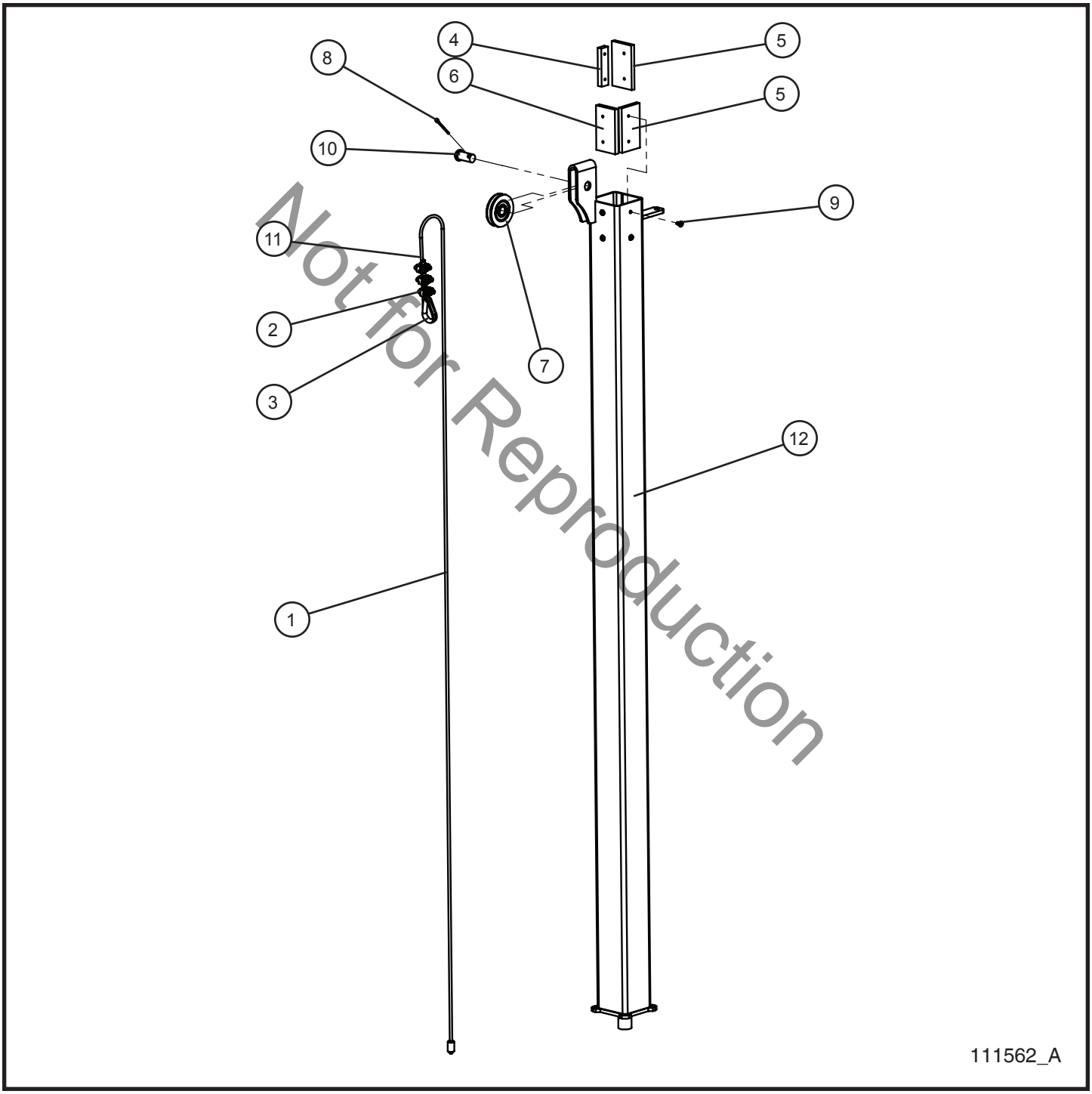

Not for Reproduction

©2017 Allmand™ Bros., Inc.

3.5 - Vertical Tower Section 3

SN 39-000001 and UP

Item	Part No.	Part Description	Qty.
1	320185	CABLE 3/16 STEEL 10’	1
2	620084	3/16 CABLE CLIP	3
3	045040	3/16 CABLE THIMBLE 3/16 WIRE ROPE	1
4	100062	3/8 UHMW SPACER	1
5	352280	PLASTIC TOWER PAD	2
6	100446	3/8 PAD SMALL	1
7	100160	2 1/2 PULLEY BALL BEARING	1
8	102906	5/8 x 1 1/4 CLEVIS PIN	1
9	041023	#10 x 3/8 PH-ROUND HEAD MS PL	8
10	045042	COTTER PIN 1/8 x 1 1/2	1
11	022150	FERRULE 10-12 AWG	1
12	110353P	TOWER WELDMENT 3 INCH SECTION	1
	110353-20	TOWER WELDMENT 3 INCH SECTION - GALVANIZED	1

Not for Reproduction

©2017 Allmand™ Bros., Inc.

3.6 - Vertical Tower Section 4

SN 39-000001 and UP

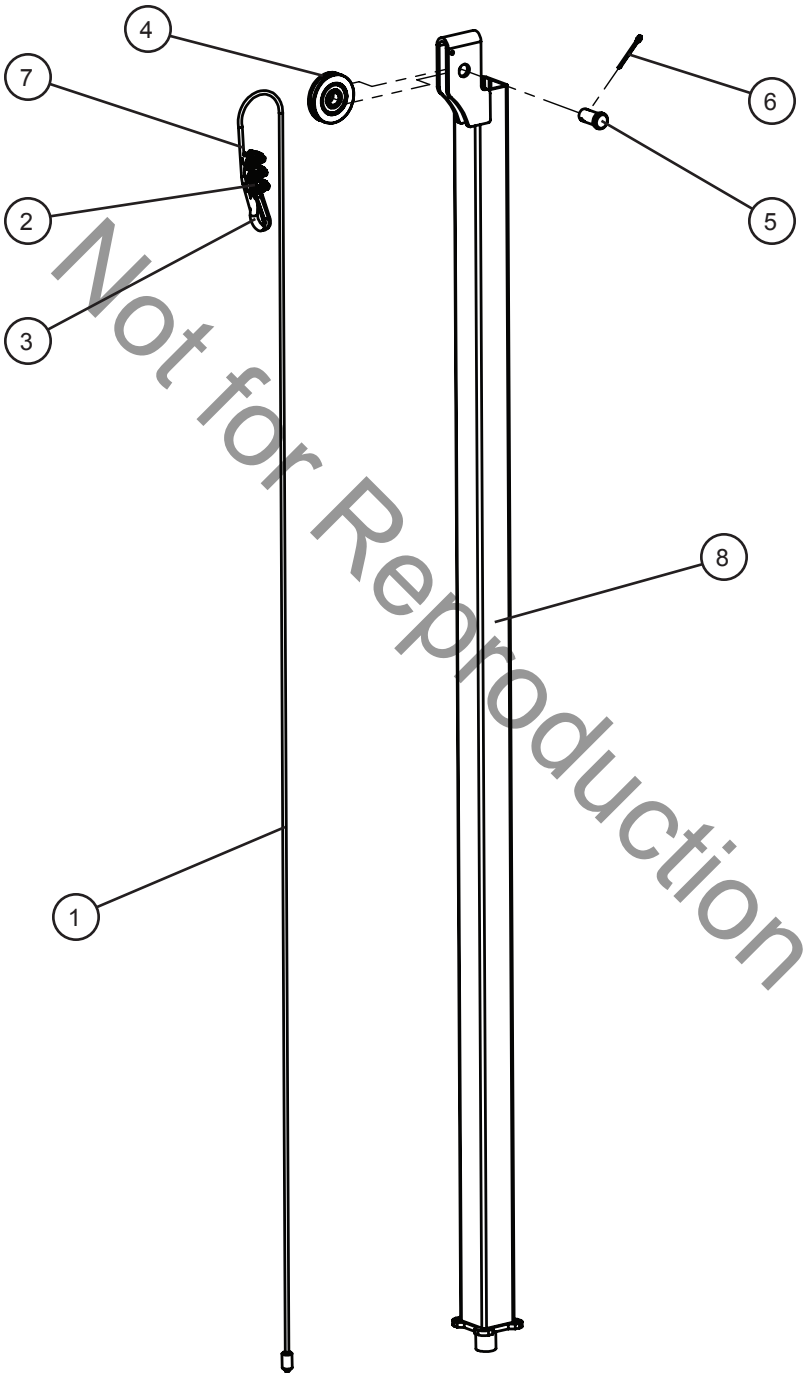

111562_A

Not for Reproduction

©2017 Allmand™ Bros., Inc.

3.6 - Vertical Tower Section 4

SN 39-000001 and UP

Item	Part No.	Part Description	Qty.
1	320185	CABLE 3/16 STEEL 10’	1
2	620084	3/16 CABLE CLIP	3
3	045040	3/16 CABLE THIMBLE 3/16 WIRE ROPE	1
4	100160	2 1/2 PULLEY BALL BEARING	1
5	102906	5/8 x 1 1/4 CLEVIS PIN	1
6	045042	COTTER PIN 1/8 x 1 1/2	1
7	022150	FERRULE 10-12 AWG	1
8	107137P	TOWER WELDMENT 2 INCH SECTION	1
	107137-20	TOWER WELDMENT 2 INCH SECTION - GALVANIZED	1

Not for Reproduction

©2017 Allmand™ Bros., Inc.

3.7 - Vertical Tower Round Section and Light Bar

SN 39-000001 and UP

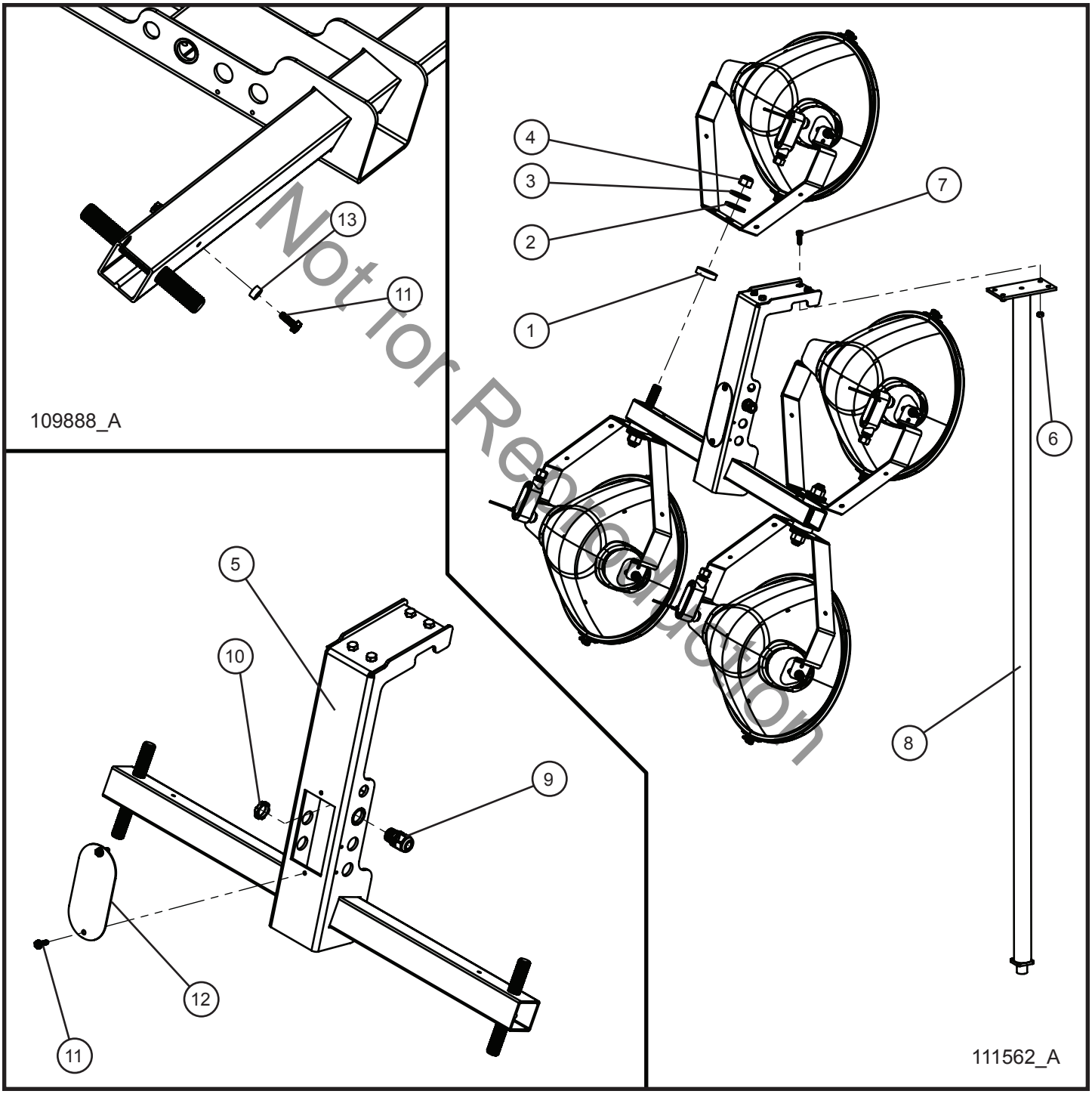

Not for Reproduction

©2017 Allmand™ Bros., Inc.

3.7 - Vertical Tower Round Section and Light Bar

SN 39-000001 and UP

Item	Part No.	Part Description	Qty.
1	101813	.781 ID x 2 OD x 1/2 HDPE WASHER	4
2	650550	.785 x 2 HDPE WASHER	4
3	047035	3/4 FLAT WASHER PL	4
4	044058	3/4-10 NYLOCK HEX NUT PL	4
5	108934P	LIGHT BAR WELDMENT NL5000	1
6	044033	5/16-18 NYLOCK HEX NUT PL	4
7	046050	5/16-18 x 1 HEX HEAD CS GR5 PL	4
8	107139P	ROUND TOWER SECTION	1
	107139-20	ROUND TOWER SECTION - GALVANIZED	1
9	105626	CORD GRIP 1/2" NYLON BLACK	1
10	022035	1/2 CORD GRIP NUT	1
11	041070	1/4-20 x 3/4 SL-HEX WASHER HEAD MS TP F	6
12	108933P	FRONT COVER LIGHT BAR	1
13	104979	CLEARANCE SPACER NYLON UNTHREADED	4

Not for Reproduction

©2017 Allmand™ Bros., Inc.

3.8 - Manual Vertical Tower Winch Install Group

SN 39-000001 and UP

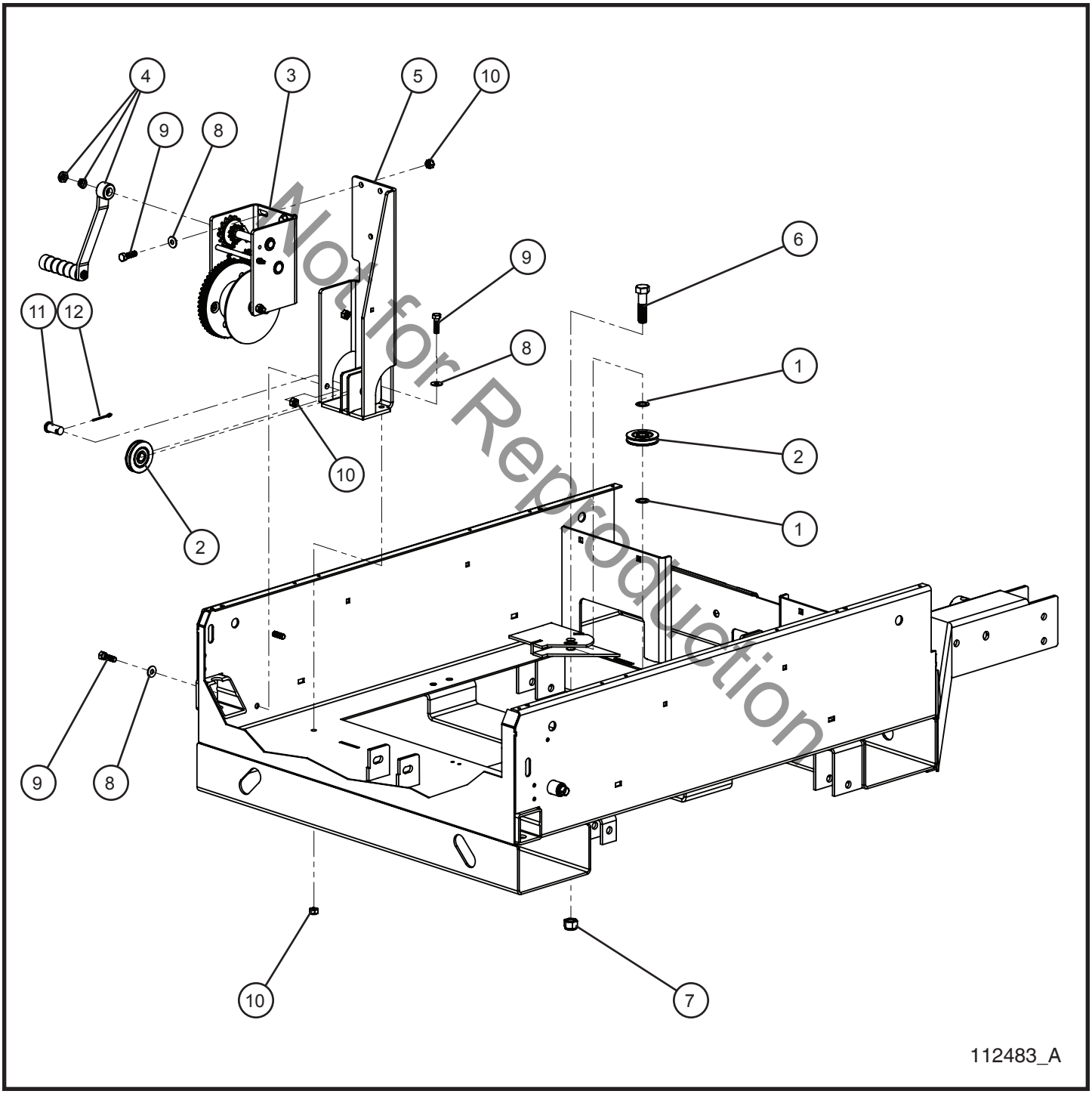

Not for Reproduction

©2017 Allmand™ Bros., Inc.

3.8 - Manual Tower Winch Install Group

SN 39-000001 and UP

Item	Part No.	Part Description	Qty.
1	047201	5/8 BUSHING	2
2	100160	2 1/2 PULLEY	2
3	108910	WINCH BRAKE 3 1/8 INCH DIAMETER HUB	1
4	712032	WINCH HANDLE	1
5	109865P	WELDMENT MOUNT WINCH	1
6	046243	5/8-11 x 2 1/2 HEX HEAD CS PL	1
7	044053	5/8-11 NYLOCK HEX NUT PL	1
8	047010	5/16 FLAT WASHER PL	6
9	046115	3/8-16 x 1 1/4 HEX HEAD CS GR5 PL	6
10	044038	3/8-16 NYLOCK HEX NUT PL	6
11	102906	5/8 x 1 1/4 CLEVIS PIN	1
12	045042	COTTER PIN 1/8 x 1 1/2	1

Not for Reproduction

©2017 Allmand™ Bros., Inc.

3.9 - Vertical Tower Cord

SN 39-000001 and UP

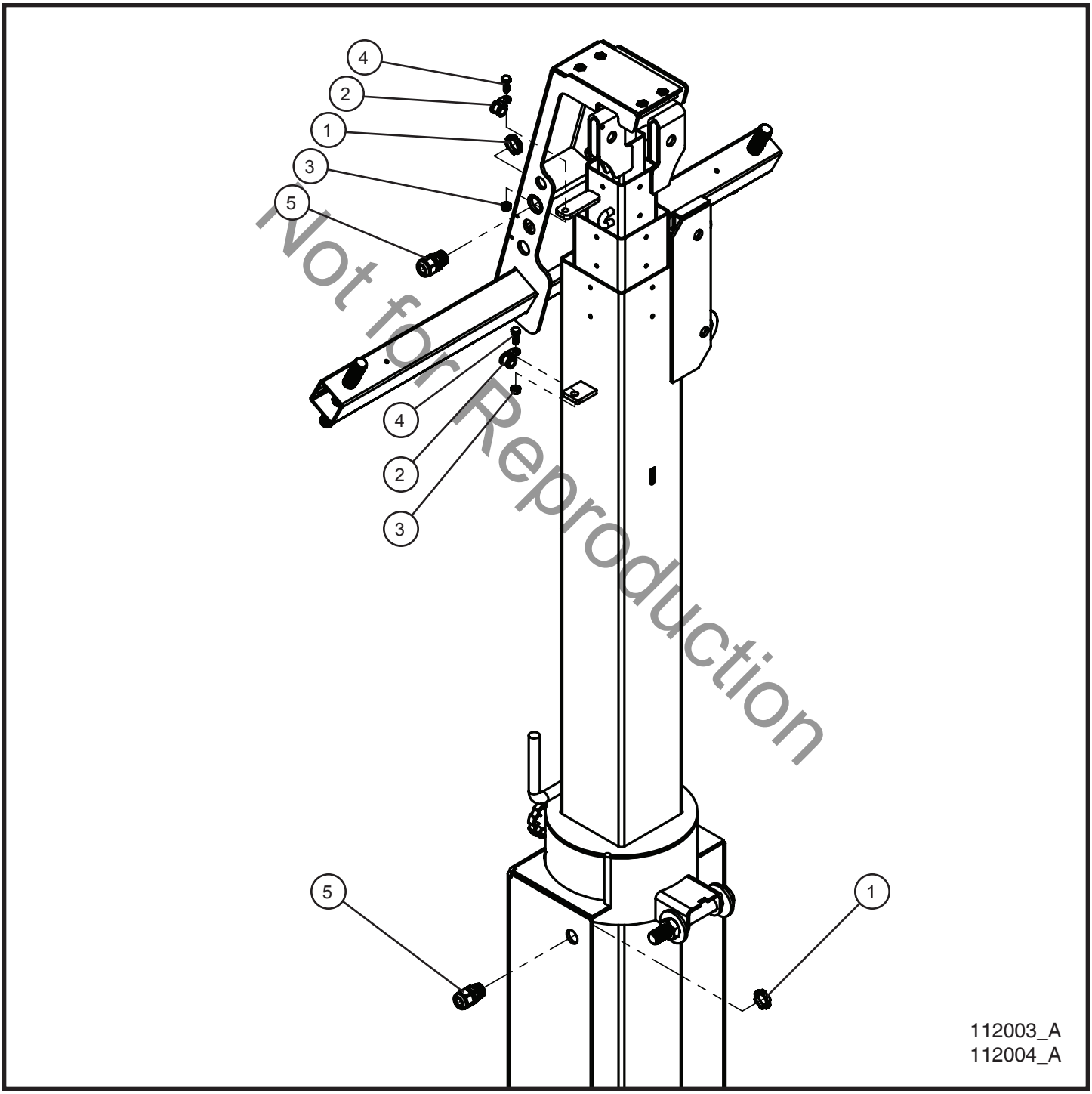

Not for Reproduction

©2017 Allmand™ Bros., Inc.

3.9 - Vertical Tower Cord

SN 39-000001 and UP

Item	Part No.	Part Description	Qty.
1	022035	1/2 CORD GRIP NUT	2
2	022016	#6 CUSH CLAMP 1/4 HOLE	2
3	044021	1/4-20 KEPS HEX NUT PL	2
4	102573	1/4-20 x 3/4 HEX HEAD CS GR5 ZINC	2
5	105626	CORD GRIP 1/2” NYLON BLACK	2
NS	109972	STANDARD TOWER CORD ASSEMBLY	1
NS	112007	LED TOWER CORD ASSEMBLY	1

*NS - NOT SHOWN

Not for Reproduction

©2017 Allmand™ Bros., Inc.

4.1 - 1250W Lamps with 60Hz 120V Ballasts Group

SN 39-000001 and UP

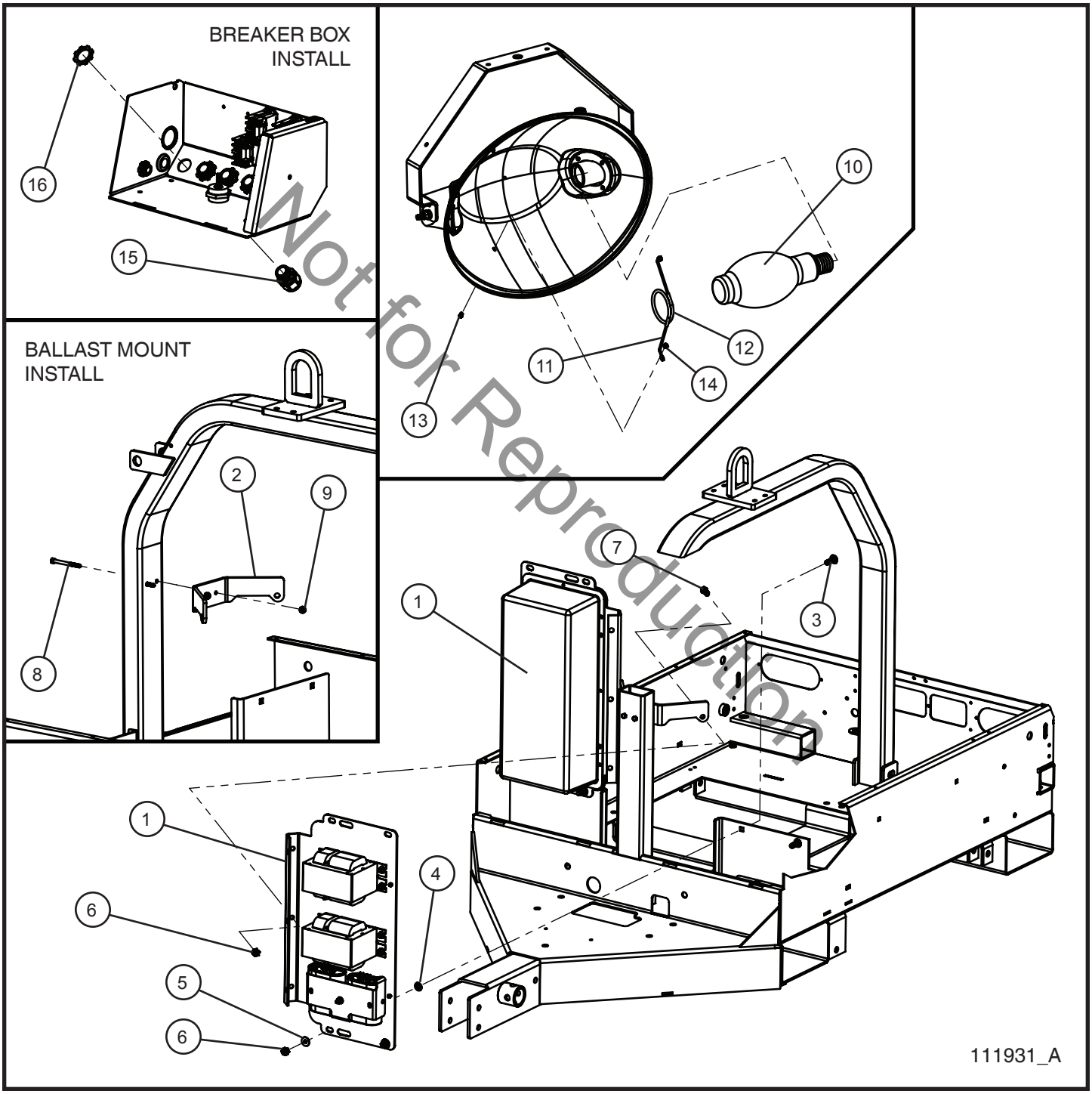

Not for Reproduction

©2017 Allmand™ Bros., Inc.

4.1 - 1250W Lamps with 60Hz 120V Ballasts Group

SN 39-000001 and UP

Item	Part No.	Part Description	Qty.
1	104481	1250W 28uF 60Hz 120V BALLAST	2
2	109834P	PLATE MOUNT BALLAST	1
3	100670	3/8-16 x 1 1/4 CARRIAGE BOLT	4
4	045218	3/8 PUSH NUT	4
5	047010	5/16 FLAT WASHER PL	4
6	044038	3/8-16 NYLOCK HEX NUT PL	6
7	046110	3/8-16 x 1 HEX HEAD CS GR5 PL	2
8	046037	1/4-20 x 2 3/4 HEX HEAD CS GR5 PL	2
9	044023	1/4-20 NYLOCK HEX NUT PL	2
10	610221	LAMP 1250W	4
11	610209	SUPPORT TIP LAMP SHO	4
12	610210	FIBERGLASS TUBE 12” LAMP SUPPORT	4
13	041200	#8-32 x 1/2 HEX WASHER HEAD INDT	8
14	044013	#8-32 NYLOCK HEX NUT SS	8
15	105916	3/4 CORD GRIP NYLON	4
16	022036	3/4 CORD GRIP NUT	4
NS	107470	BALLAST CORD NL5000	4
NS	112038	NLV BALLAST CORD SCHEMATIC	1

*NS - NOT SHOWN

Not for Reproduction

©2017 Allmand™ Bros., Inc.

4.2 - 1250W 60Hz 120V Ballast Box Assembly Group

SN 39-000001 and UP

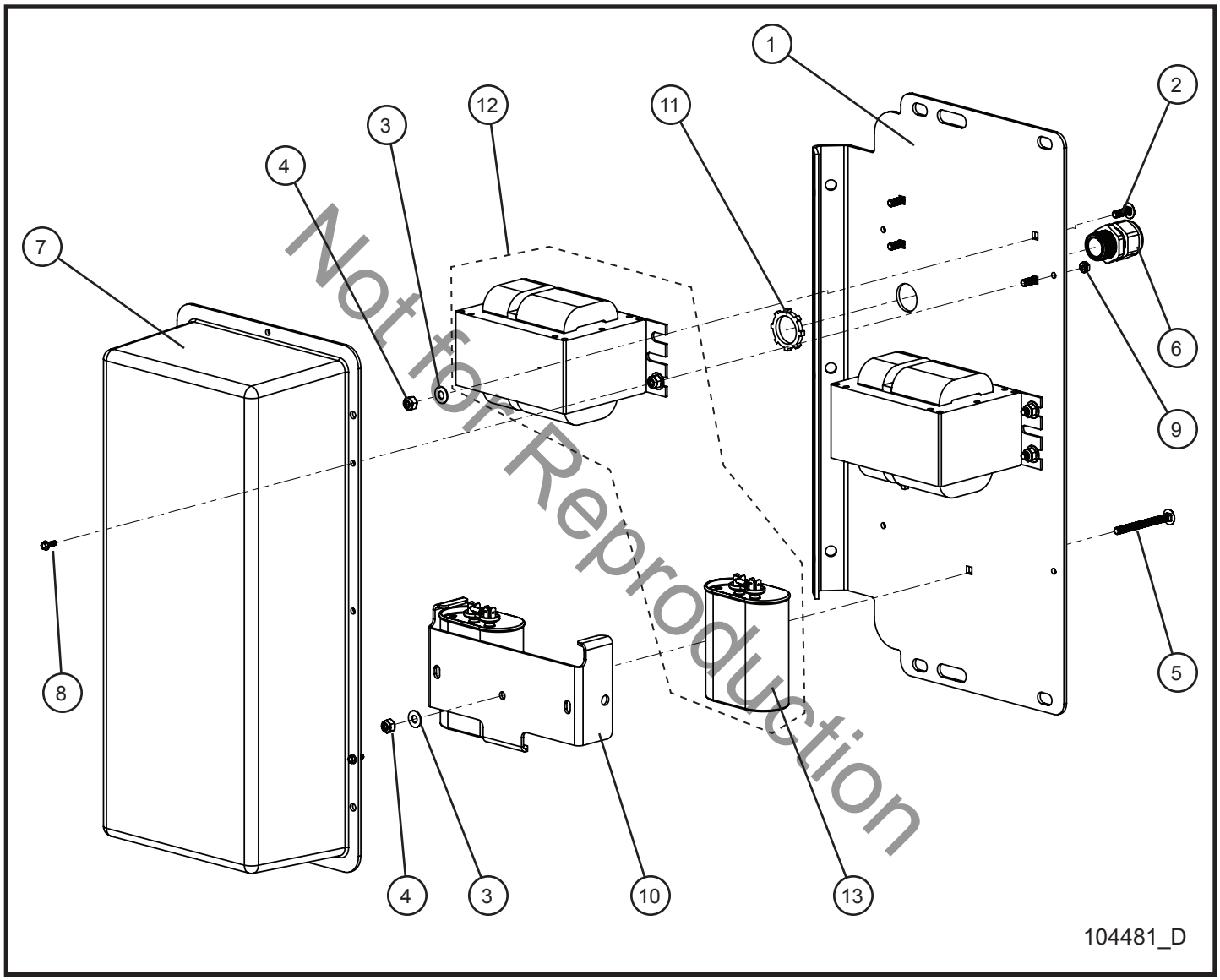

Not for Reproduction

©2017 Allmand™ Bros., Inc.

4.2 - 1250W 60Hz 120V Ballast Box Assembly Group

SN 39-000001 and UP

Item	Part No.	Part Description	Qty.
1	105914P	MOUNT PLATE BALLAST BOX	1
2	053006	1/4-20 x 3/4 CARRIAGE BOLT	8
3	047009	1/4 FLAT WASHER SAE SS	9
4	044023	1/4-20 NYLOCK HEX NUT PL	9
5	100718	1/4-20 x 2 1/4 CARRIAGE BOLT	1
6	105916	GRIP CORD NYLON 3/4	2
7	102752	BALLAST TOP MODULAR BOX	1
8	041029	#8-32 x 1/2 HEX WASHER HEAD SCREW	4
9	044003	#8-32 NC KEPS NUT	4
10	100392P	TABBED CAPACITOR CLAMP	1
11	022036	3/4 CORD GRIP NUT	2
12	109606	BALLAST KIT 1250W 60Hz 120/240V 28uF (INCLUDES 100329)	2
13	100329	CAPACITOR 28uF 1250W	2
NS	105286	SCHEMATIC 60Hz 1250W	1

*NS - NOT SHOWN

Not for Reproduction

©2017 Allmand™ Bros., Inc.

4.3 - 1000W Lamps with 60Hz 120V Ballasts Group

SN 39-000001 and UP

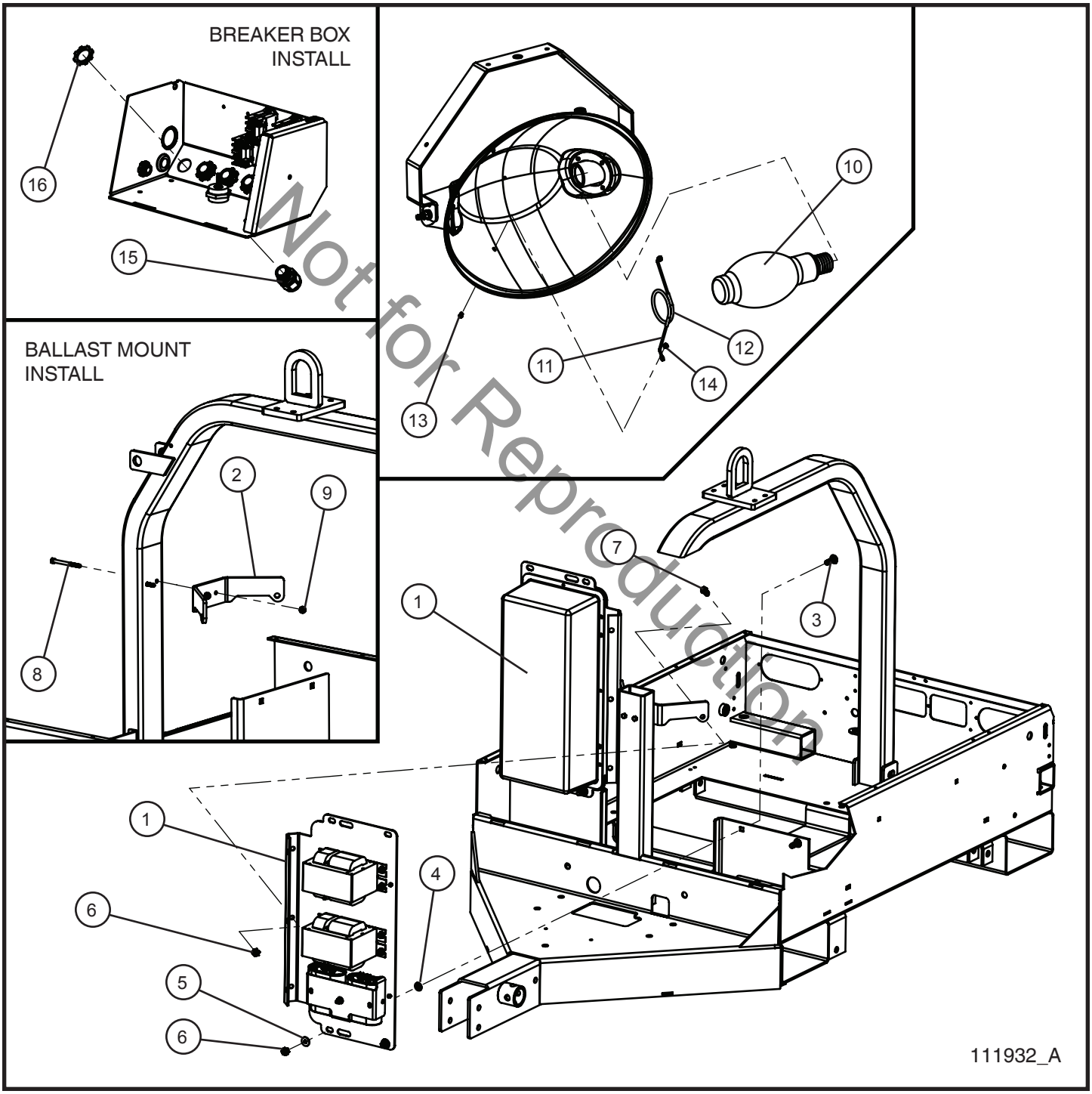

Not for Reproduction

©2017 Allmand™ Bros., Inc.

4.3 - 1000W Lamps with 60Hz 120V Ballasts Group

SN 39-000001 and UP

Item	Part No.	Part Description	Qty.
1	102400	1000W 60Hz 120V BALLAST	2
2	109834P	PLATE MOUNT BALLAST	1
3	100670	3/8-16 x 1 1/4 CARRIAGE BOLT	4
4	045218	3/8 PUSH NUT	4
5	047010	5/16 FLAT WASHER PL	4
6	044038	3/8-16 NYLOCK HEX NUT PL	6
7	046110	3/8-16 x 1 HEX HEAD CS GR5 PL	2
8	046037	1/4-20 x 2 3/4 HEX HEAD CS GR5 PL	2
9	044023	1/4-20 NYLOCK HEX NUT PL	2
10	610211	LAMP 1000W	4
11	610209	SUPPORT TIP LAMP SHO	4
12	610210	FIBERGLASS TUBE 12” LAMP SUPPORT	4
13	041200	#8-32 x 1/2 HEX WASHER HEAD INDT	8
14	044013	#8-32 NYLOCK HEX NUT SS	8
15	105916	3/4 CORD GRIP NYLON	4
16	022036	3/4 CORD GRIP NUT	4
NS	107470	BALLAST CORD NL5000	4
NS	112038	NLV BALLAST CORD SCHEMATIC	1

*NS - NOT SHOWN

Not for Reproduction

©2017 Allmand™ Bros., Inc.

4.4 - 1000W 60Hz 120V Ballast Box Assembly Group

SN 39-000001 and UP

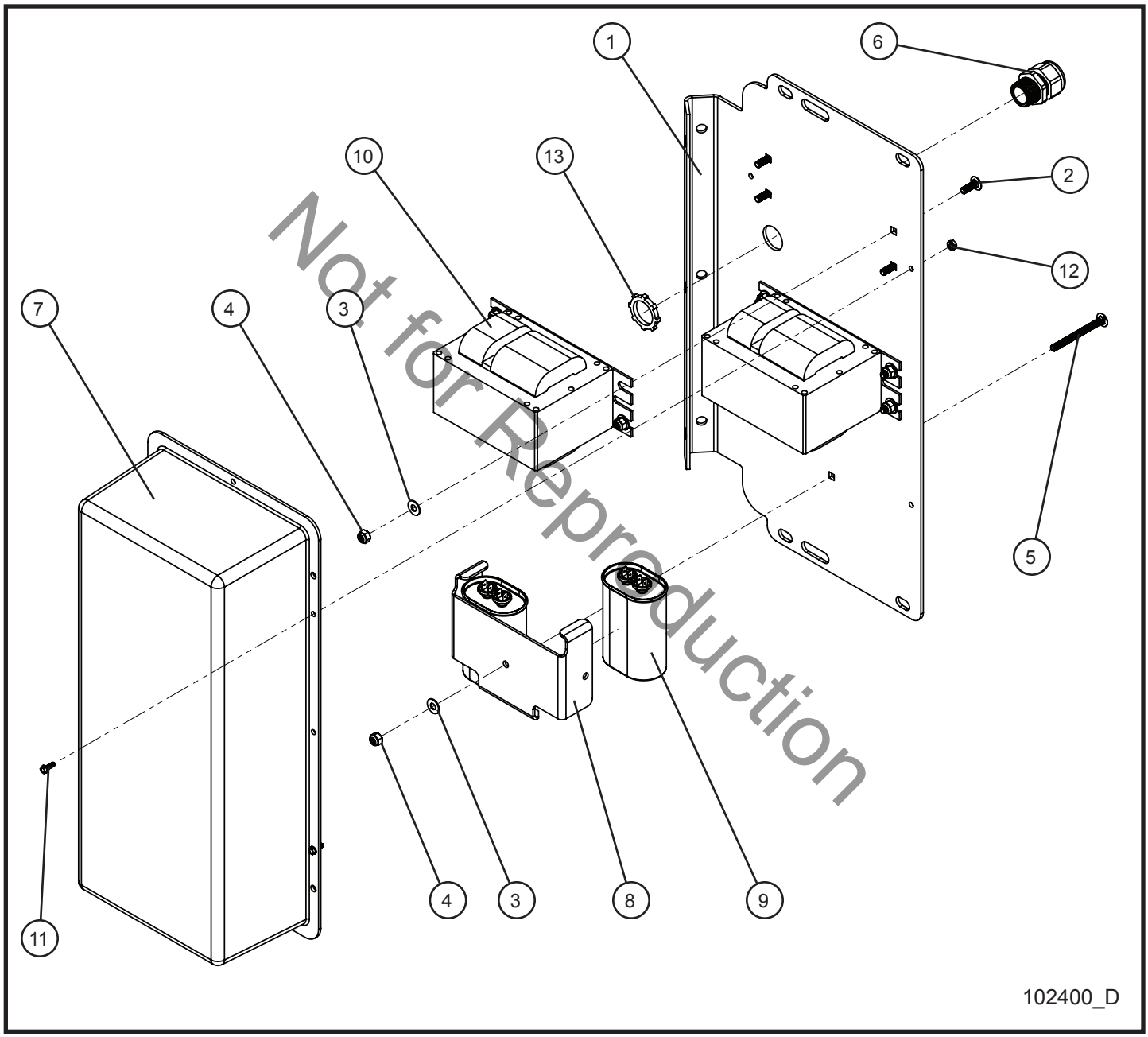

Not for Reproduction

©2017 Allmand™ Bros., Inc.

4.4 - 1000W 60Hz 120V Ballast Box Assembly Group

SN 39-000001 and UP

Item	Part No.	Part Description	Qty.
1	105914P	MOUNT PLATE BALLAST BOX	1
2	053006	1/4-20 x 3/4 CARRIAGE BOLT	8
3	047009	1/4 FLAT WASHER SAE SS	9
4	044023	1/4-20 NYLOCK HEX NUT PL	9
5	100718	1/4-20 x 2 1/4 CARRIAGE BOLT	1
6	105916	GRIP CORD NYLON 3/4	2
7	102752	BALLAST TOP MODULAR BOX	1
8	680608P	TABBED CAPACITOR CLAMP	1
9	310115	CAPACITOR 24uF 1000W	2
10	310124	BALLAST 1000W 60Hz 120V	2
11	041029	#8-32 x 1/2 HEX WASHER HEAD SCREW	4
12	044003	#8-32 NC KEPS NUT	4
13	022036	3/4 CORD GRIP NUT	2
NS	105287	SCHEMATIC BALLAST 1000W 60Hz 120V	1

*NS - NOT SHOWN

Not for Reproduction

©2017 Allmand™ Bros., Inc.

4.5 - 1000W Lamps with 50Hz 120V Ballasts Group

SN 39-000001 and UP

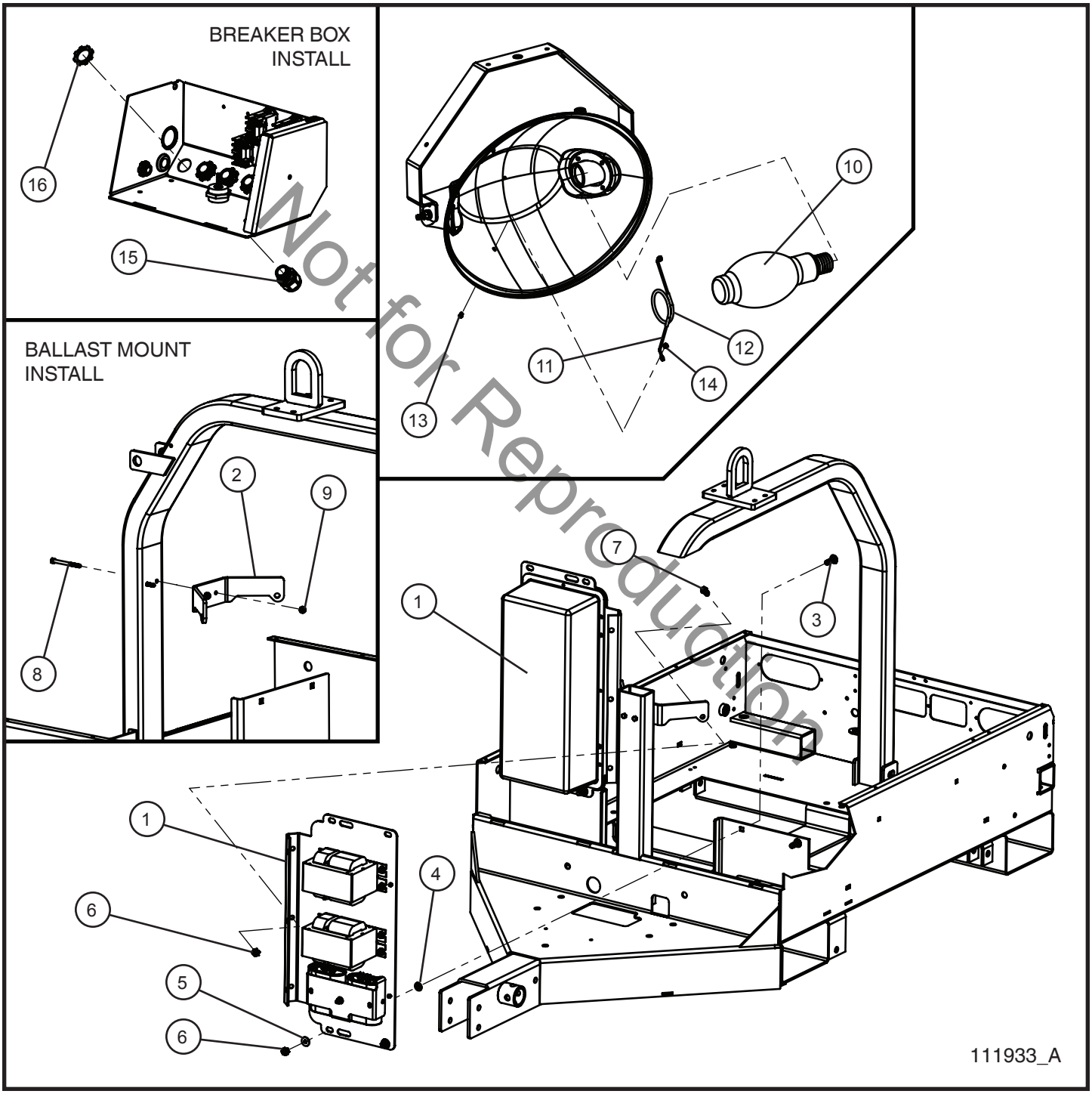

Not for Reproduction

©2017 Allmand™ Bros., Inc.

4.5 - 1000W Lamps with 50Hz 120V Ballasts Group

SN 39-000001 and UP

Item	Part No.	Part Description	Qty.
1	102402	1000W 50Hz 120V BALLAST	2
2	109834P	PLATE MOUNT BALLAST	1
3	100670	3/8-16 x 1 1/4 CARRIAGE BOLT	4
4	045218	3/8 PUSH NUT	4
5	047010	5/16 FLAT WASHER PL	4
6	044038	3/8-16 NYLOCK HEX NUT PL	6
7	046110	3/8-16 x 1 HEX HEAD CS GR5 PL	2
8	046037	1/4-20 x 2 3/4 HEX HEAD CS GR5 PL	2
9	044023	1/4-20 NYLOCK HEX NUT PL	2
10	610211	LAMP 1000W	4
11	610209	SUPPORT TIP LAMP SHO	4
12	610210	FIBERGLASS TUBE 12” LAMP SUPPORT	4
13	041200	#8-32 x 1/2 HEX WASHER HEAD INDT	8
14	044013	#8-32 NYLOCK HEX NUT SS	8
15	105916	3/4 CORD GRIP NYLON	4
16	022036	3/4 CORD GRIP NUT	4
NS	107470	BALLAST CORD NL5000	4
NS	112038	NLV BALLAST CORD SCHEMATIC	1

*NS - NOT SHOWN

Not for Reproduction

©2017 Allmand™ Bros., Inc.

4.6 - 1000W 50Hz 120V Ballast Box Assembly

SN 39-000001 and UP

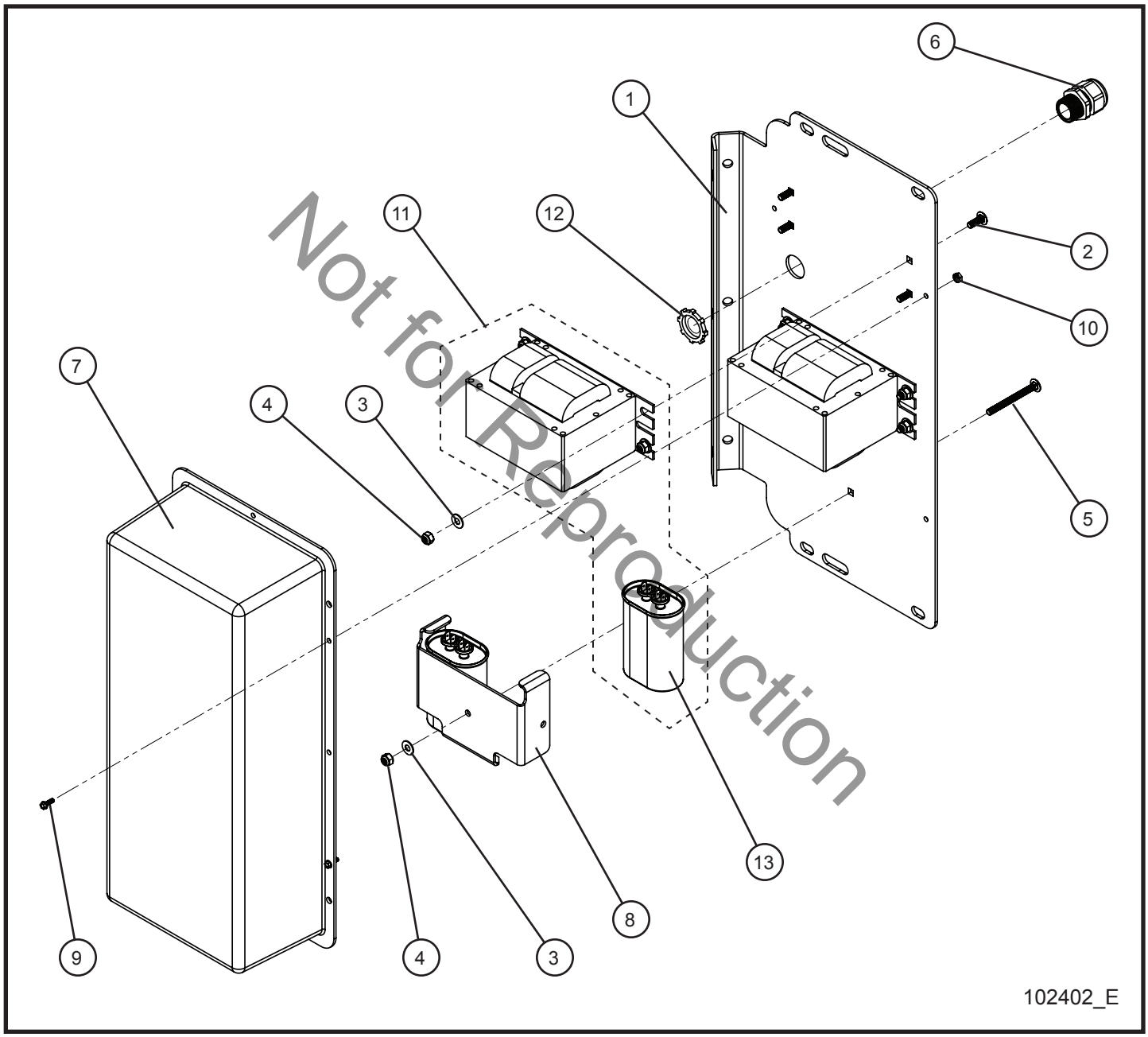

Not for Reproduction

©2017 Allmand™ Bros., Inc.

4.6 - 1000W 50Hz 120V Ballast Box Assembly

SN 39-000001 and UP

Item	Part No.	Part Description	Qty.
1	105914P	MOUNT PLATE BALLAST BOX	1
2	053006	1/4-20 x 3/4 CARRIAGE BOLT	8
3	047009	1/4 FLAT WASHER SAE SS	9
4	044023	1/4-20 NYLOCK HEX NUT PL	9
5	100718	1/4-20 x 2 1/4 CARRIAGE BOLT	1
6	105916	GRIP CORD NYLON 3/4	2
7	102752	BALLAST TOP MODULAR BOX	1
8	680608P	TABBED CAPACITOR CLAMP	1
9	041029	#8-32 x 1/2 HEX WASHER HEAD SCREW	4
10	044003	#8-32 NC KEPS NUT	4
11	310116A	BALLAST KIT 1000W 50Hz	2
12	022036	3/4 CORD GRIP NUT	2
13	310115A	CAPACITOR 26UF 60/50Hz 540V	2
NS	105288	SCHEMATIC BALLAST 1000W 50Hz	1

*NS - NOT SHOWN

Not for Reproduction

©2017 Allmand™ Bros., Inc.

4.7 - LED Lamps with LED Drivers Group

SN 39-000001 and UP

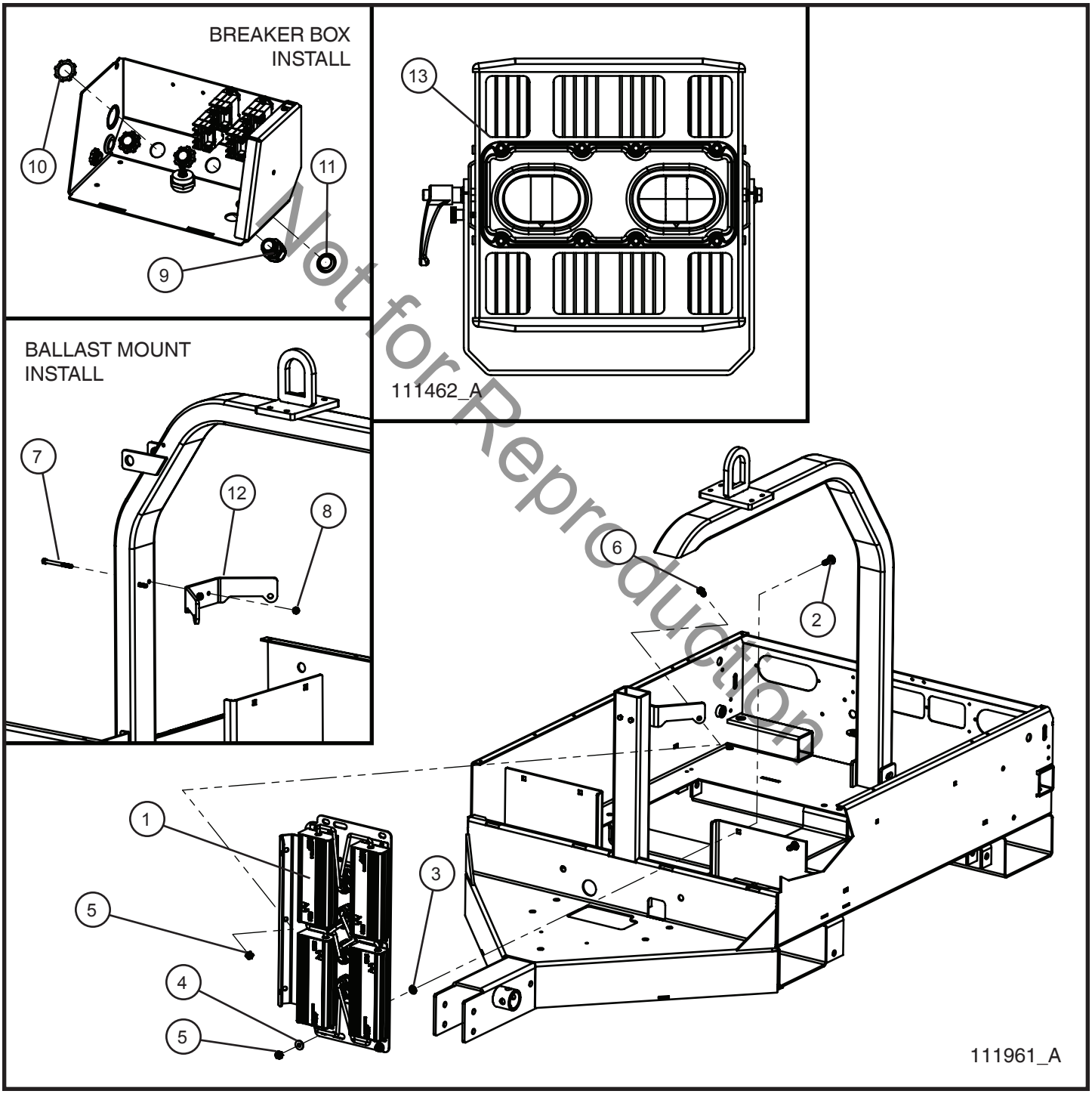

Not for Reproduction

©2017 Allmand™ Bros., Inc.

4.7 - LED Lamps with LED Drivers Group

SN 39-000001 and UP

Item	Part No.	Part Description	Qty.
1	111959	FOUR DRIVER LED LIGHTING	1
2	100670	3/8-16 x 1 1/4 CARRIAGE BOLT	2
3	045218	3/8 PUSH NUT	2
4	047010	5/16 FLAT WASHER PL	2
5	044038	3/8-16 NYLOCK HEX NUT PL	3
6	046110	3/8-16 x 1 HEX HEAD CS GR5 PL	1
7	046037	1/4-20 x 2 3/4 HEX HEAD CS GR5 PL	2
8	044023	1/4-20 NYLOCK HEX NUT PL	2
9	105916	3/4 CORD GRIP NYLON	3
10	022036	3/4 CORD GRIP NUT	3
11	064025	1 1/16 IN. PLASTIC PLUG	1
12	109834P	PLATE MOUNT BALLAST	1
13	111451	CONSSIN KUEM2-320 LED LIGHT	4
NS	111462	CONSSIN LED LIGHT AND DRIVER KIT (INCL. 111449 & 111451)	1
NS	111998	OUTPUT CORD LED DRIVER NLV	1
NS	111997	INPUT CORD LED DRIVER NLV	2
NS	110096	NLV LED DRIVERS SCHEMATIC	1

*NS - NOT SHOWN

Not for Reproduction

©2017 Allmand™ Bros., Inc.

4.8 - LED Drivers Assembly Group

SN 39-000001 and UP

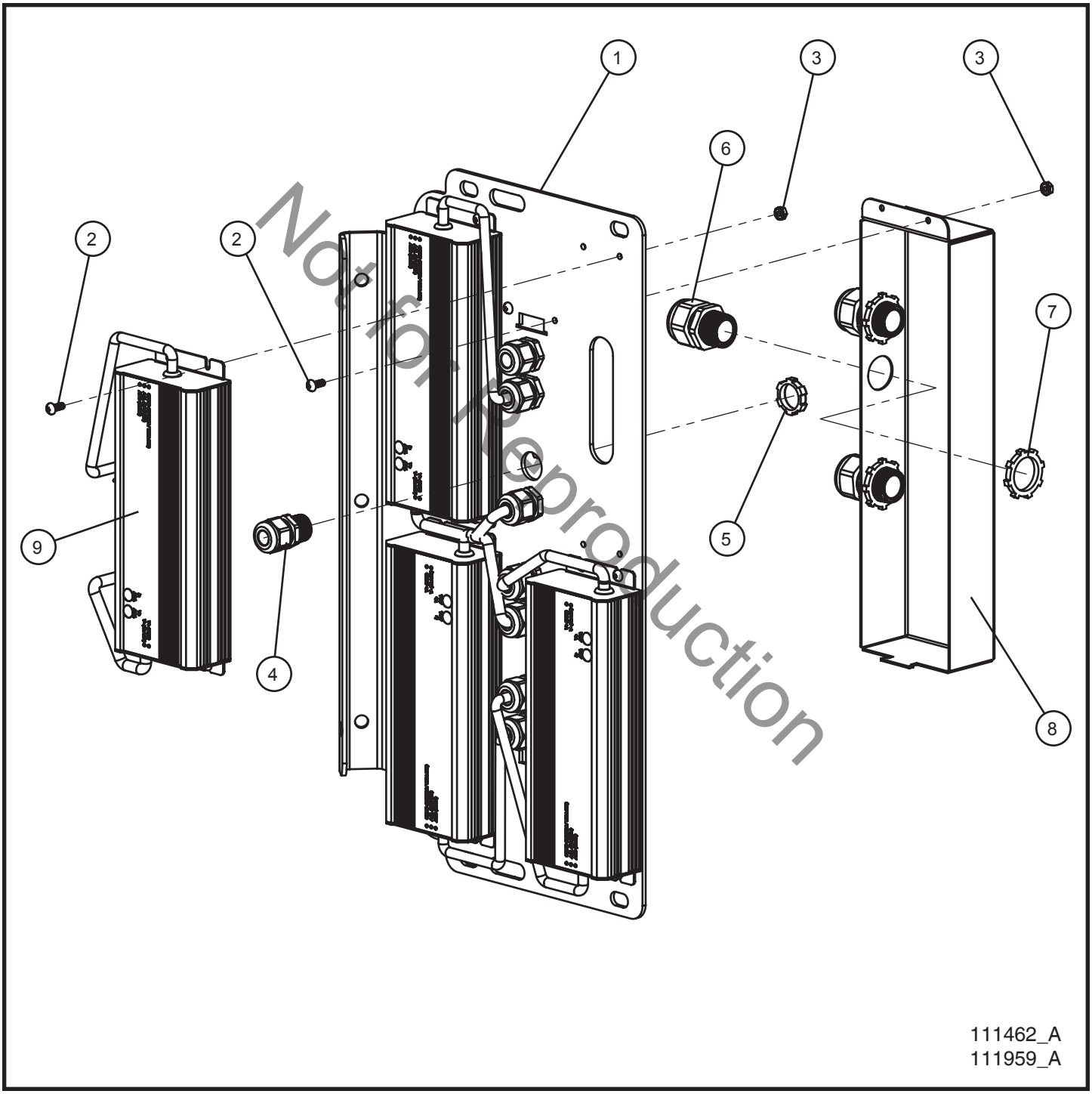

Not for Reproduction

©2017 Allmand™ Bros., Inc.

4.8 - LED Drivers Assembly Group

SN 39-000001 and UP

Item	Part No.	Part Description	Qty.
1	111465P	MOUNT PLATE LED DRIVER	1
2	041012	SCREW MS #8-32 x 1/2 PL	18
3	044003	#8-32 NC KEPS NUT	18
4	105626	CORD GRIP 1/2 NYLON BLACK	8
5	022035	1/2 CORD GRIP NUT	8
6	105916	CORD GRIP NYLON 3/4	3
7	022036	3/4 CORD GRIP NUT	3
8	111960P	LED DRIVER JUNCTION BOX	1
9	111449	CONSSIN HLG-320-54A LED DRIVER	4
NS	111462	CONSSIN LED LIGHT AND DRIVER KIT (INCL. 111449 & 111451)	1

*NS - NOT SHOWN

Not for Reproduction

©2017 Allmand™ Bros., Inc.

4.9 - SHO and LED Light Fixtures

SN 39-000001 and UP

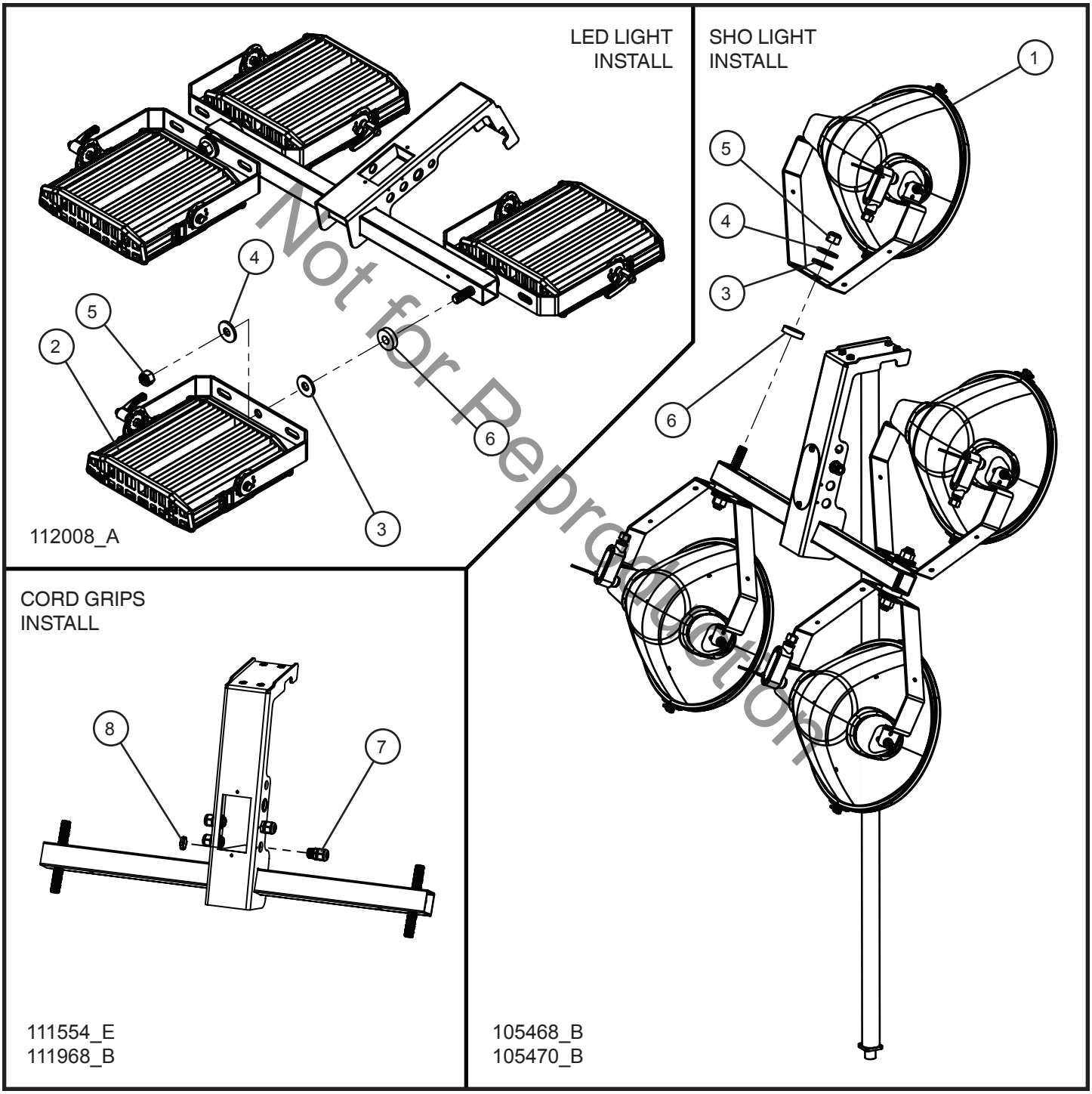

Not for Reproduction

©2017 Allmand™ Bros., Inc.

4.9 - SHO and LED Light Fixtures

SN 39-000001 and UP

Item	Part No.	Part Description	Qty.
1	650147	LAMPHOLDER SHO LIGHT NO LAMPS	4
	650144	LAMPHOLDER SHO LIGHT WITH 1000W LAMPS	4
	100633	LAMPHOLDER SHO LIGHT WITH 1250W LAMPS	4
2	111451	CONSSIN KUEM2-320 LED LIGHT	4
3	650550	.785” x 2” HDPE WASHER	4
4	047035	3/4 FLAT WASHER PL	4
5	044058	3/4-10 NYLOCK HEX NUT PL	4
6	101813	.781 ID x 2 OD x 1/2 HDPE WASHER	4
7	105626	CORD GRIP 1/2” NYLON BLACK	4
8	022035	1/2 CORD GRIP NUT	4
NS	650159	SHO LIGHT LAMP LEAD 16/3 CORD PIG TAIL	4
NS	111462	CONSSIN LED LIGHT AND DRIVER KIT (INCL. 111449 & 111451)	1
NS	112039	SCHEMATIC 4 LAMPS SOLID WIRED	1
NS	110106	SCHEMATIC LED LIGHT 4 LIGHT BAR	1

*NS - NOT SHOWN

Not for Reproduction

©2017 Allmand™ Bros., Inc.

4.10 - SHO Light Assembly Group

SN 39-000001 and UP

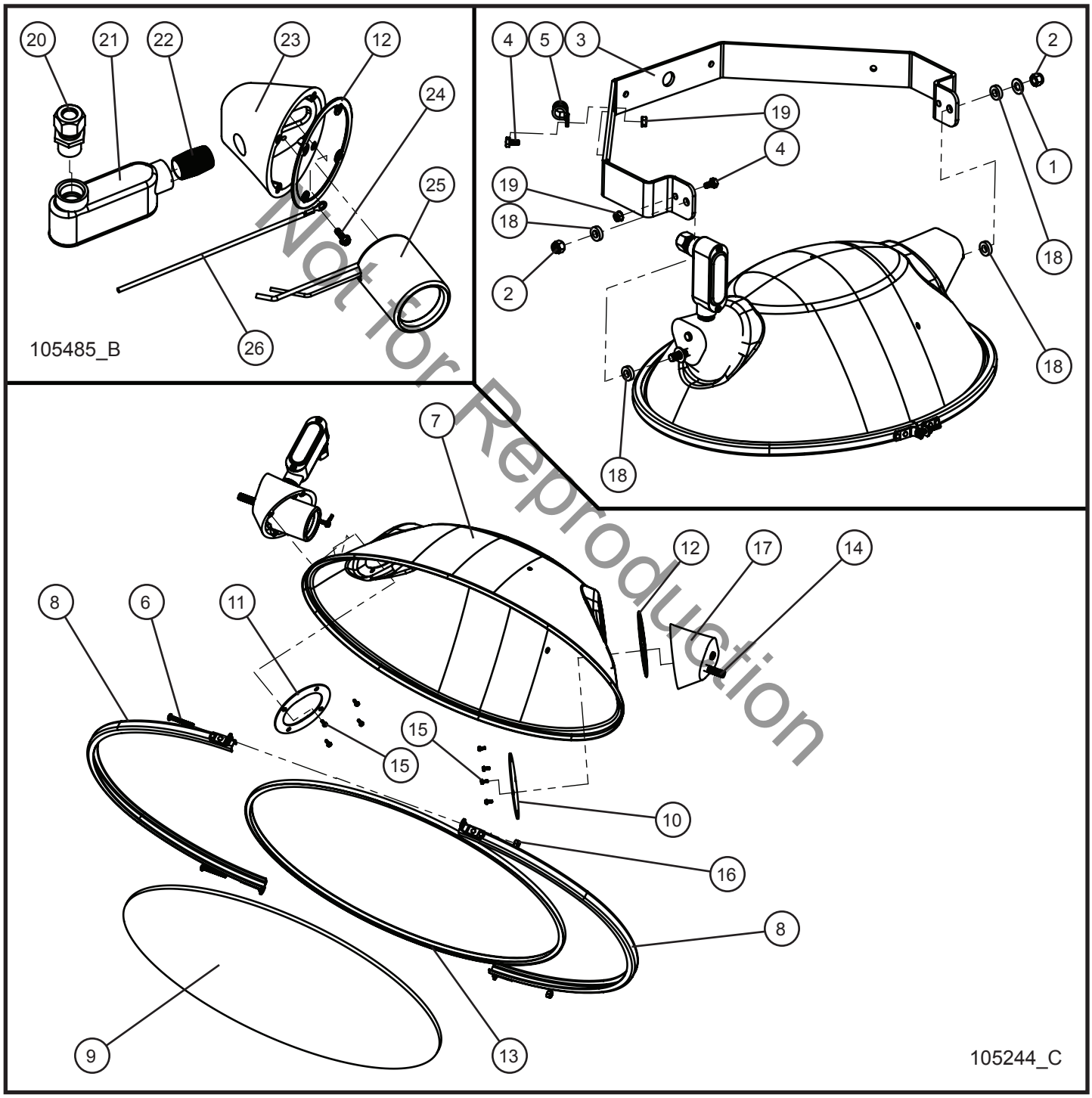

Not for Reproduction

©2017 Allmand™ Bros., Inc.

4.10 - SHO Light Assembly Group

SN 39-000001 and UP

Item	Part No.	Part Description	Qty.
--	105244	COMPLETE LAMP ASSEMBLY	1
1	047016	3/8 FLAT WASHER SAE ZINC	2
2	044037	3/8-24 NYLOCK HEX NUT PL	2
3	660130	YOKE MOUNT SHO LAMP	1
4	046005	1/4-20 x 1/2 HEX HEAD CS GR5 PL	2
5	022022	#8 CUSH CLAMP 1/4 HOLE	1
6	041040	#10-24 x 1 1/2 PH-ROUND HEAD MS SS	2
7	610201	REFLECTOR	1
8	610202	LENS CHANNEL SET SHO LIGHT	2
9	610203	GLASS LENS	1
10	610207	INTERIOR COVER PLATE WITHOUT HOLE	1
11	610208	INTERIOR COVER PLATE WITH HOLE	1
12	610213	GASKET SOCKET END CAP	2
13	610217	SILICONE GASKET	1
14	045142	3/8-24 x 3/8-16 x 2 STUD	2
15	041028	#10-24 x 1/2 HEX WASHER HEAD INDT	8
16	044019	#10-24 NYLOCK HEX NUT SS	2
17	610206	CASTING END SHO	1
18	047019	NYLON BUSHING 3/4 OD x .385 ID	4
19	044021	1/4-20 KEPS HEX NUT PL	2
20	510007	1/2 CORD GRIP	1
21	610214	ELBOW 1/2 SLB SHO ENTRANCE	1
22	610215	1/2 NPT NIPPLE	1
23	610205	SOCKET CASTING END SHO	1
24	041257	#10-32 x 3/8 SL-HEX WASHER HEAD MS GRND	1
25	610212	CERAMIC SOCKET	1
26	610219	GROUND WIRE LAMPHOLDER SHO ENTRANCE	1

Not for Reproduction

©2017 Allmand™ Bros., Inc.

4.11 - SHO Light SAF-T-Visor

SN 39-000001 and UP

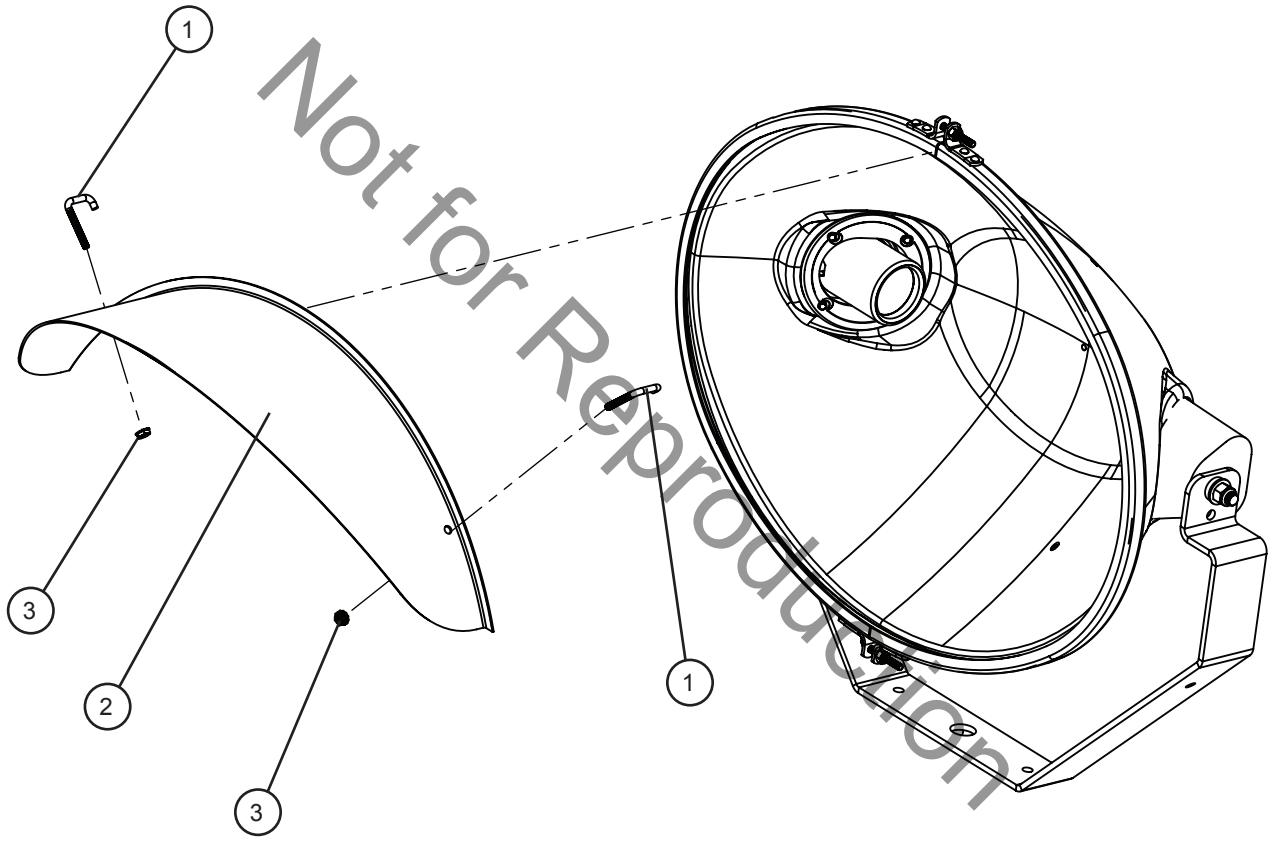

610017M_A

Not for Reproduction

©2017 Allmand™ Bros., Inc.

4.11 - SHO Light SAF-T-Visor

SN 39-000001 and UP

Item	Part No.	Part Description	Qty.
1	045070	#10-24 HOOK SQ BEND BOLT	8
2	610017	SAF-T VISOR SHO LAMP (*SEE NOTE)	4
3	044016	#10-24 KEPS HEX NUT PL	8

*NOTE: SAF-T VISOR MUST BE INSTALLED WITH LIP BETWEEN GASKET AND GLASS LENS.

Not for Reproduction

©2017 Allmand™ Bros., Inc.

5.1 - SLS Key Start Control Box (1 of 2)

SN 39-000001 and UP

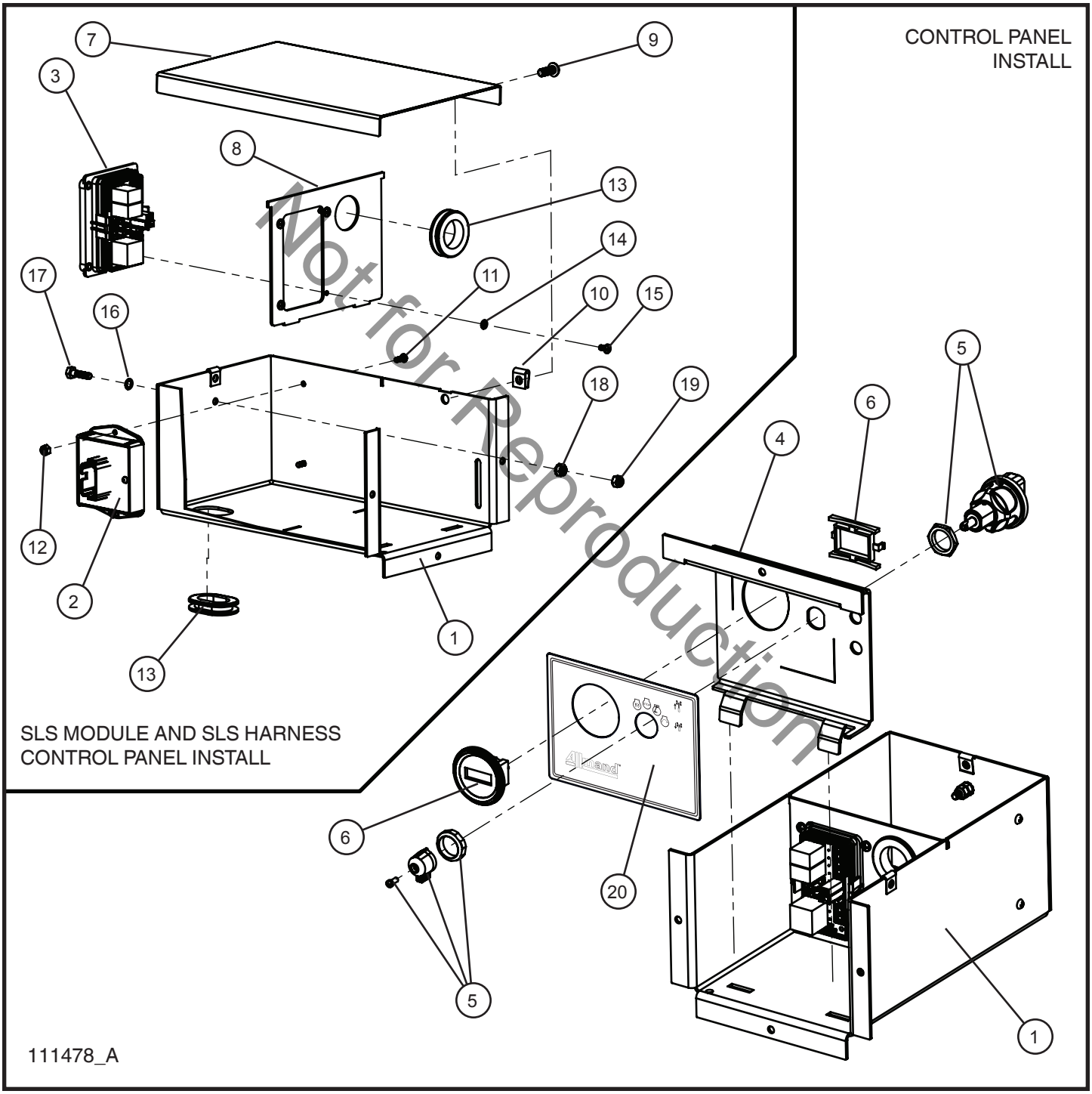

Not for Reproduction

©2017 Allmand™ Bros., Inc.

5.1 - SLS Key Start Control Box (1 of 2)

SN 39-000001 and UP

Item	Part No.	Part Description	Qty.
1	111427P	BOX CONTROL	1
2	108053	SLS 1.1 MODULE	1
3	108024	HARNESS SLS CONTROL PANEL	1
4	112404P	PANEL CONTROL LSC/SLS	1
5	106273	IGNITION SWITCH LEVER STYLE	1
6	340014	HOUR METER DIGITAL	1
7	111428P	COVER CONTROL PANEL BOX	1
8	111946P	PLATE DIVIDER DC CONTROL BOX	1
9	041050	1/4-20 x 3/4 PH-TRUSS HEAD MS SS MACHINE SCREW	2
10	045216	1/4-20 TINNERMAN NUT	2
11	041021	#10-24 x 1/2 PH-ROUND HEAD MS PL	2
12	044019	#10-24 NYLOCK HEX NUT SS	2
13	650542	1 1/4 ID x 1 1/2 OD GROMMET	2
14	043017	#10 INTL TOOTHLOCK WASHER	1
15	041019	#10-32 x 3/8 PH-ROUND HEAD MS PL	4
16	043050	1/4 INTL TOOTHLOCK WASHER	1
17	046015	1/4-20 x 1 HEX HEAD CS GR5 PL	1
18	044021	1/4-20 KEPS HEX NUT PL	1
19	044023	1/4-20 NYLOCK HEX NUT PL	1
20	110297	NLV CONTROL BOX DECAL	1
NS	112040	SCHEMATIC SLS RELAY	1

*NS - NOT SHOWN

Not for Reproduction

©2017 Allmand™ Bros., Inc.

5.1 - SLS Key Start Control Box (2 of 2)

SN 39-000001 and UP

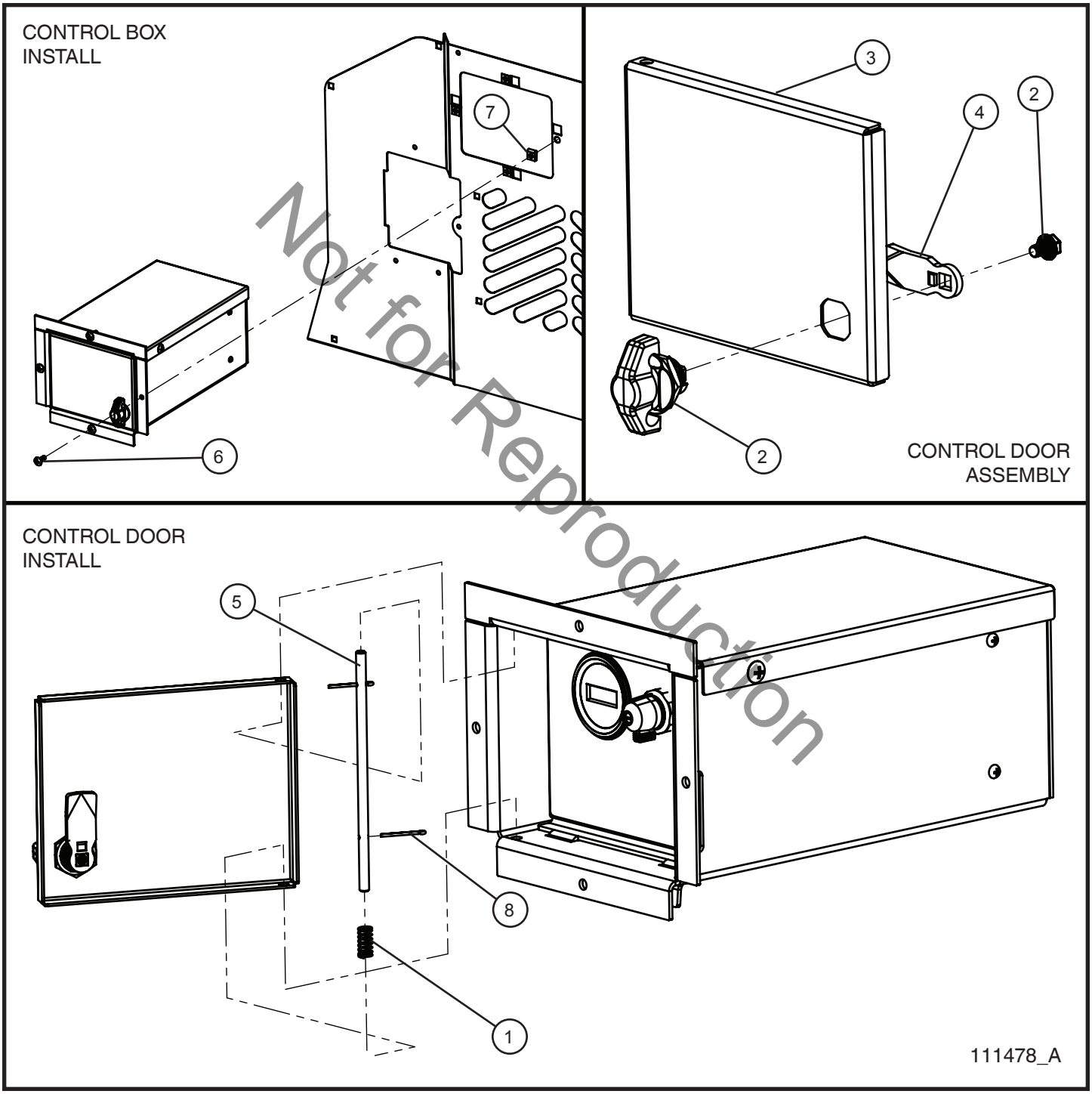

Not for Reproduction

©2017 Allmand™ Bros., Inc.

5.1 - SLS Key Start Control Box (2 of 2)

SN 39-000001 and UP

Item	Part No.	Part Description	Qty.
1	106528	SPRING COMPRESSION 3/8 x 3/4	1
2	111481	WINGKNOB PADLOCKABLE BLACK	1
3	111424P	PANEL DOOR CONTROL BOX	1
4	111482	LATCH CAM STRAIGHT	1
5	111425	PIN HINGE	1
6	041050	1/4-20 x 3/4 PH-TRUSS HEAD MS SS MACHINE SCREW	4
7	045216	1/4-20 TINNERMAN NUT	4
8	045041	COTTER PIN 5/64 x 1 IN.	2

Not for Reproduction

©2017 Allmand™ Bros., Inc.

5.2 - SLS Harness Control Panel

SN 39-000001 and UP

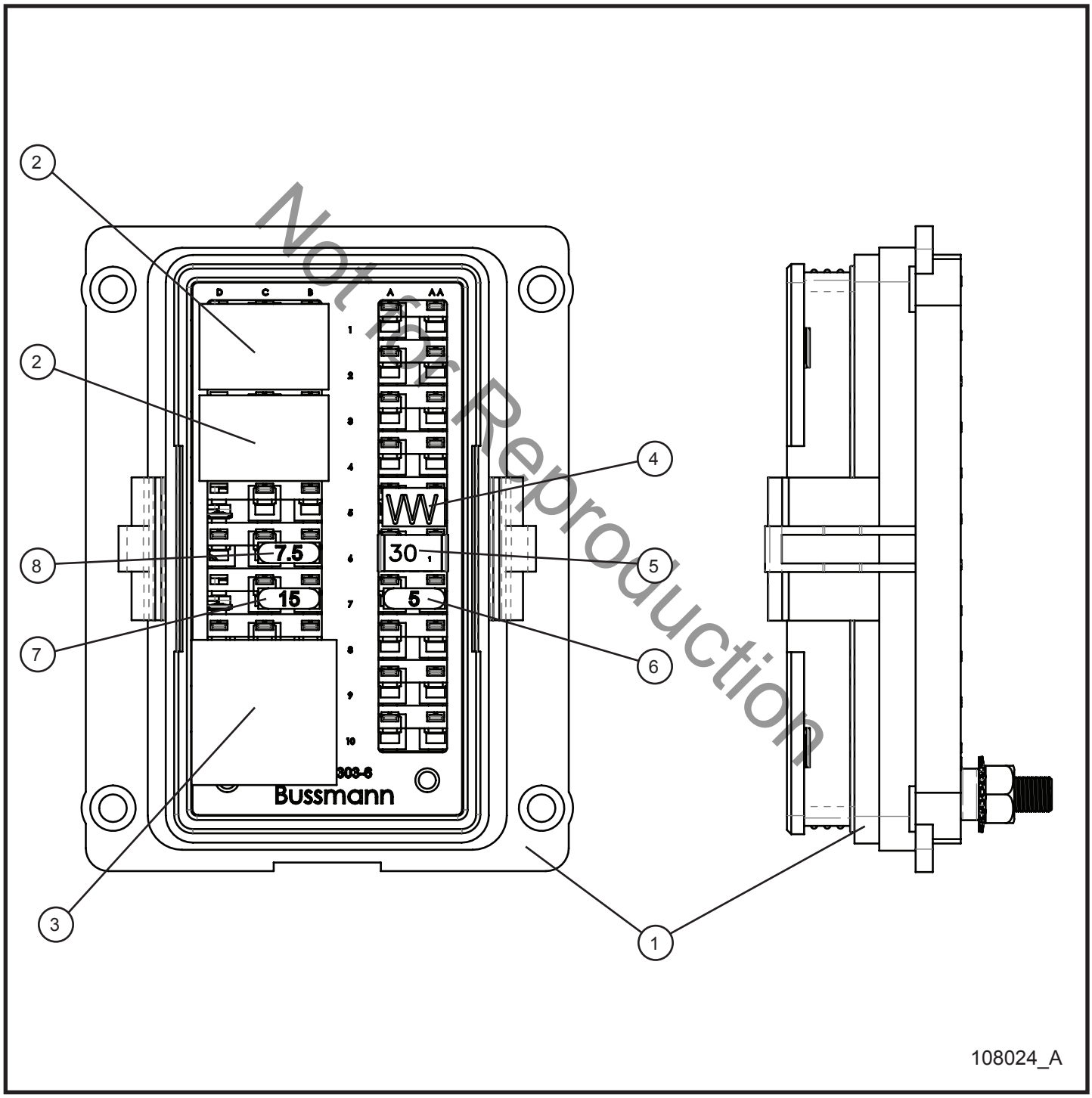

Not for Reproduction

©2017 Allmand™ Bros., Inc.

5.2 - SLS Harness Control Panel

SN 39-000001 and UP

Item	Part No.	Part Description	Qty.
--	108024	NEW HARNESS SLS CONTROL PANEL	1
1	105199	BUSSMANN 45 PIN BOARD MODULE	1
2	105201	35 AMP SPST RELAY	2
3	105202	50 AMP SPST RELAY	1
4	105204	RESISTOR 68OHM	1
5	105832	CIRCUIT BREAKER 30A	1
6	105843	5A MINI FUSE	1
7	105844	15A MINI FUSE	1
8	105876	7.5A MINI FUSE	1

Not for Reproduction

©2017 Allmand™ Bros., Inc.

5.3 - LSC Control Box (1 of 3)

SN 39-000001 and UP

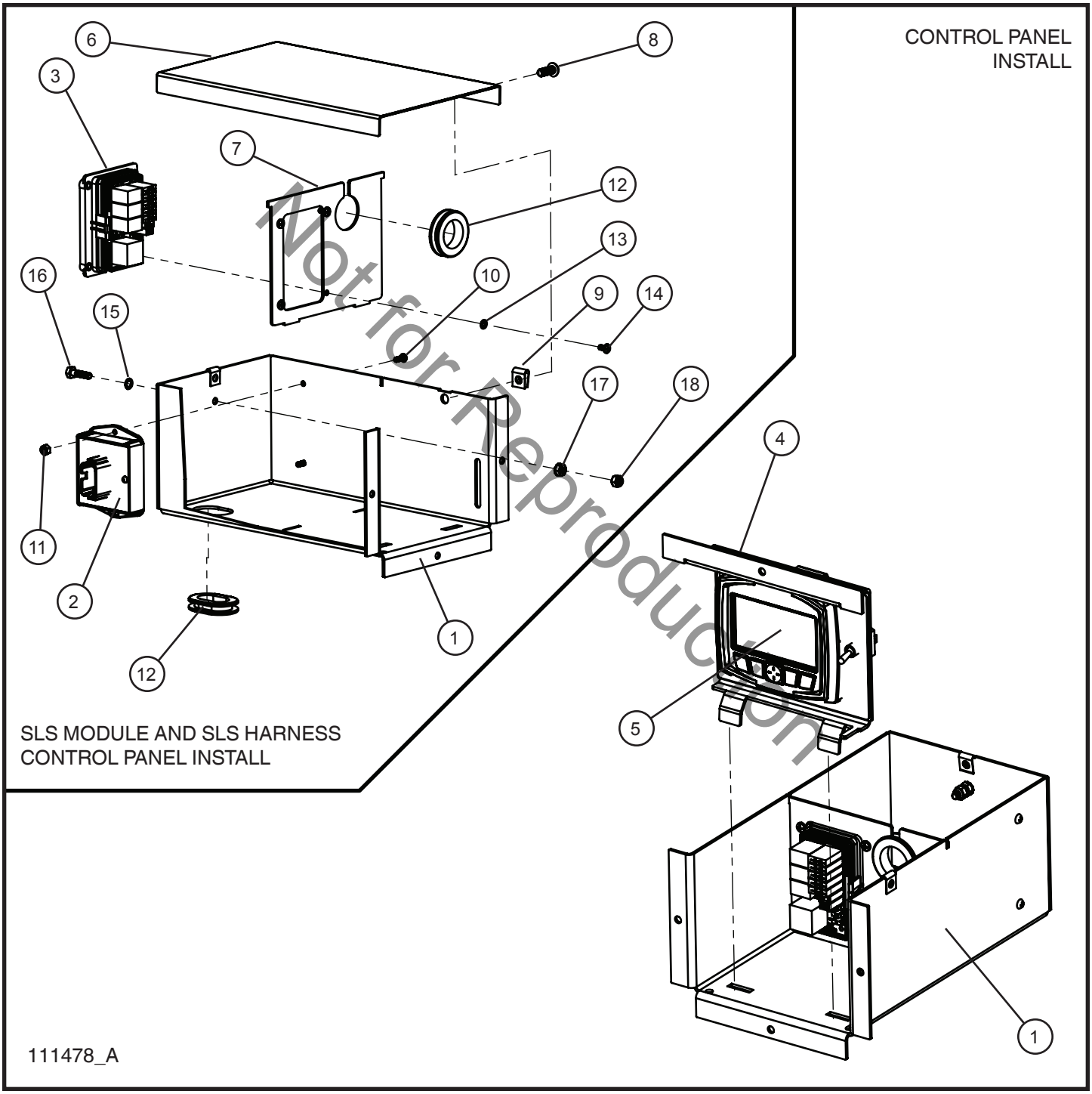

Not for Reproduction

©2017 Allmand™ Bros., Inc.

5.3 - LSC Control Box (1 of 3)

SN 39-000001 and UP

Item	Part No.	Part Description	Qty.
1	111427P	BOX CONTROL	1
2	108053	SLS 1.1 MODULE	1
3	105210	HARNESS LSC CONTROL PANEL	1
4	112404P	NLV CONTROL PANEL LSC/SLS	1
5	107404	LSC 2.1 MODULE	1
6	111428P	COVER CONTROL PANEL BOX	1
7	111946P	PLATE DIVIDER DC CONTROL BOX	1
8	041050	1/4-20 x 3/4 PH-TRUSS HEAD MS SS MACHINE SCREW	2
9	045216	1/4-20 TINNERMAN NUT	2
10	041021	#10-24 x 1/2 PH-ROUND HEAD MS PL	2
11	044019	#10-24 NYLOCK HEX NUT SS	2
12	650542	1 1/4 ID x 1 1/2 OD GROMMET	2
13	043017	#10 INTL TOOTHLOCK WASHER	1
14	041019	#10-32 x 3/8 PH-ROUND HEAD MS PL	4
15	043050	1/4 INTL TOOTHLOCK WASHER	1
16	046015	1/4-20 x 1 HEX HEAD CS GR5 PL	1
17	044021	1/4-20 KEPS HEX NUT PL	1
18	044023	1/4-20 NYLOCK HEX NUT PL	1
NS	112623	TRANSFORMER 117/6.3V SCHEMATIC	1
NS	105895	LSC SCHEMATIC	1

*NS - NOT SHOWN

Not for Reproduction

©2017 Allmand™ Bros., Inc.

5.3 - LSC Control Box (2 of 3)

SN 39-000001 and UP

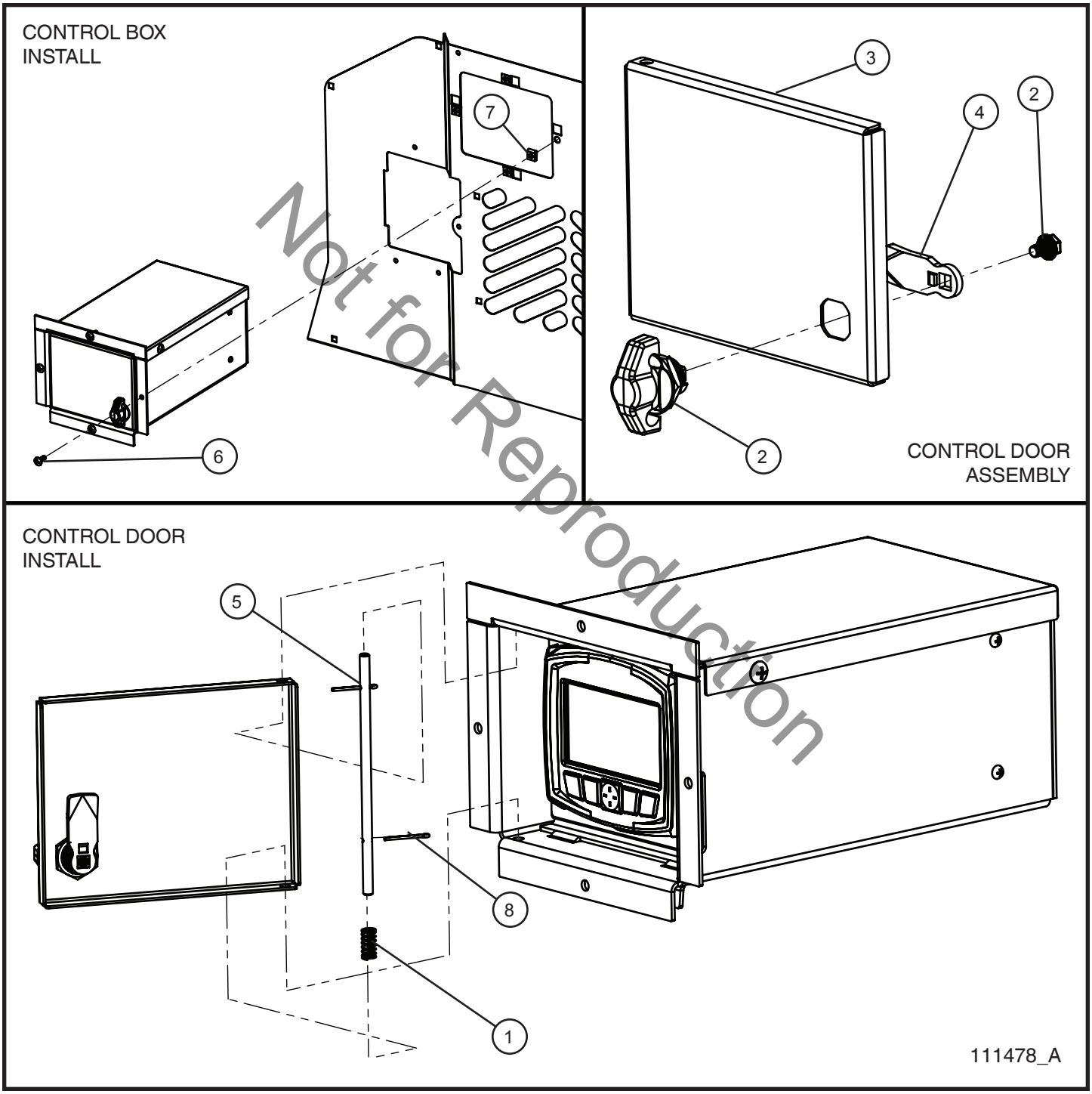

Not for Reproduction

©2017 Allmand™ Bros., Inc.

5.3 - LSC Control Box (2 of 3)

SN 39-000001 and UP

Item	Part No.	Part Description	Qty.
1	106528	SPRING COMPRESSION 3/8 x 3/4	1
2	111481	WINGKNOB PADLOCKABLE BLACK	1
3	111424P	PANEL DOOR CONTROL BOX	1
4	111482	LATCH CAM STRAIGHT	1
5	111425	PIN HINGE	1
6	041050	1/4-20 x 3/4 PH-TRUSS HEAD MS SS MACHINE SCREW	4
7	045216	1/4-20 TINNERMAN NUT	4
8	045041	COTTER PIN 5/64 x 1 IN.	2

Not for Reproduction

©2017 Allmand™ Bros., Inc.

5.3 - LSC Control Box (3 of 3)

SN 39-000001 and UP

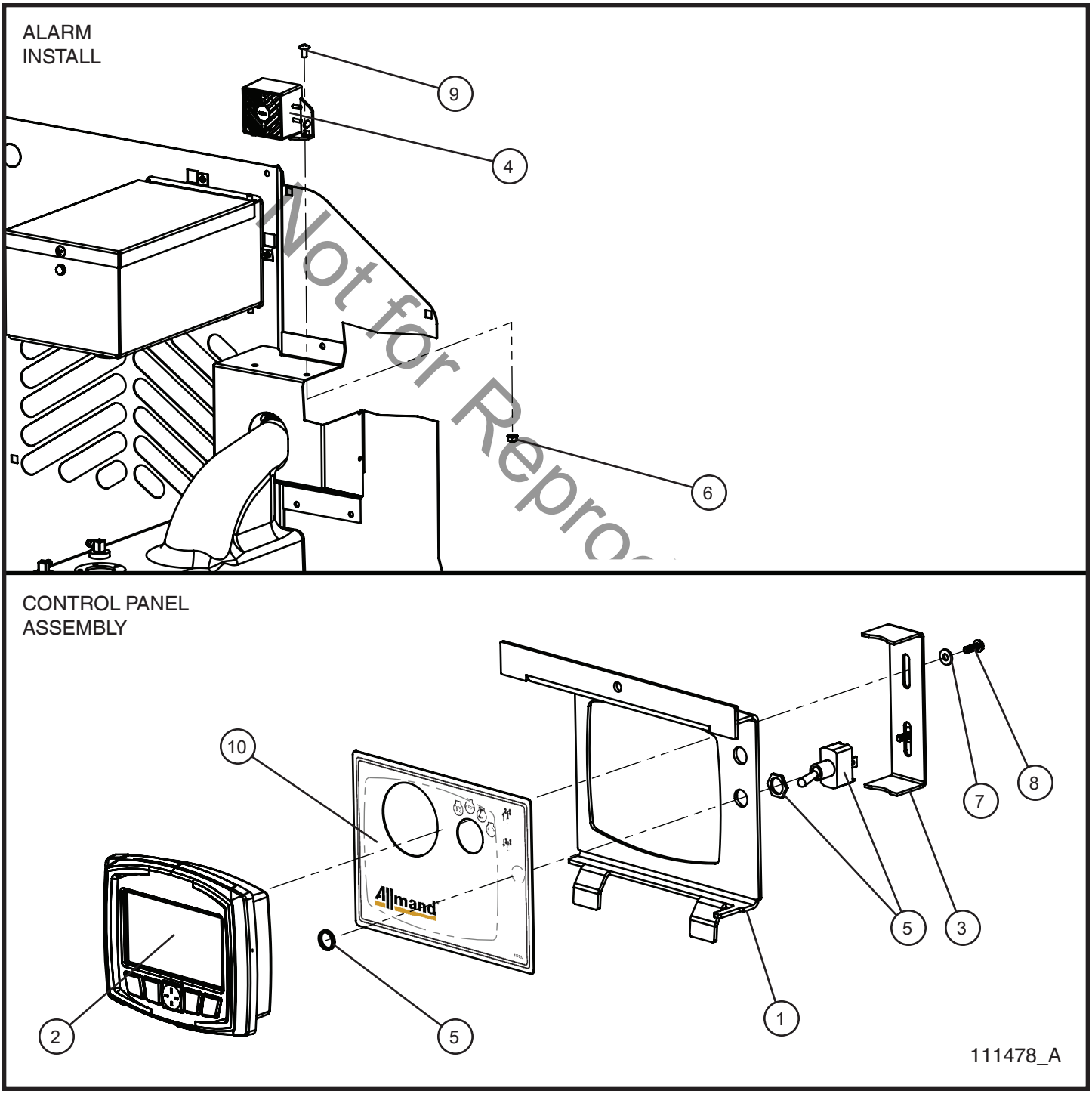

Not for Reproduction

©2017 Allmand™ Bros., Inc.

5.3 - LSC Control Box (3 of 3)

SN 39-000001 and UP

Item	Part No.	Part Description	Qty.
1	112404P	NLV CONTROL PANEL LSC/SLS	1
2	107404	LSC 2.1 MODULE	1
3	105188P	LSC BACK BRACKET	1
4	105846	ALARM 102 DB	1
5	101067	SPST SWITCH	1
6	044021	1/4-20 KEPS HEX NUT	2
7	103738	#8 FLAT WASHER	2
8	041200	#8-32 x 1/2 HEX WASHER HEAD	2
9	041078	1/4 x 1/2 PHILLIPS TRUSS HEAD MACHINE SCREW	2
10	110297	DECAL CONTROL BOX	1

Not for Reproduction

©2017 Allmand™ Bros., Inc.

5.4 - LSC Harness Control Panel

SN 39-000001 and UP

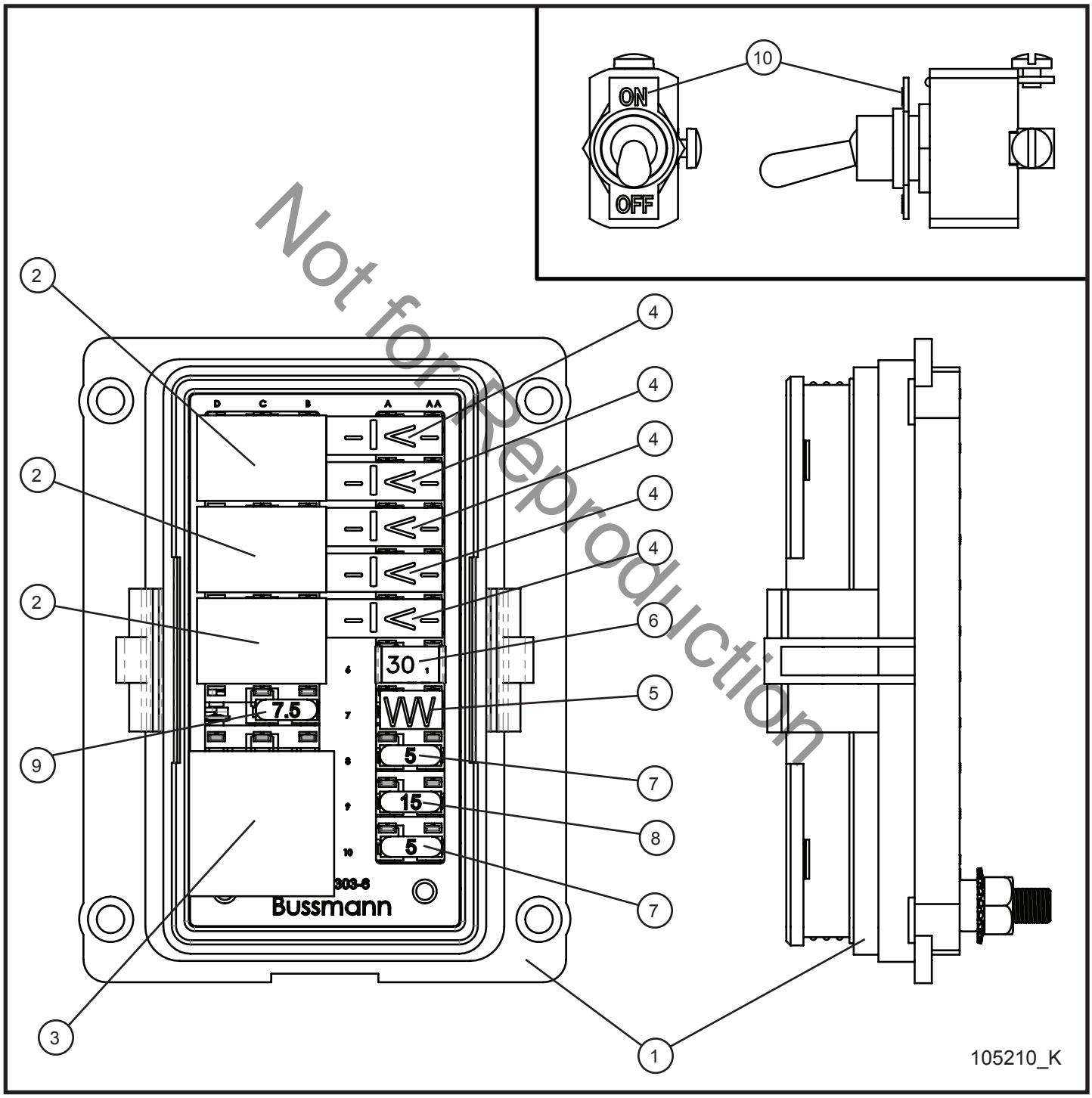

Not for Reproduction

©2017 Allmand™ Bros., Inc.

5.4 - LSC Harness Control Panel

SN 39-000001 and UP

Item	Part No.	Part Description	Qty.
--	105210	HARNESS LSC CONTROL PANEL COMPLETE	1
1	105199	BUSSMANN 45 PIN BOARD MODULE	1
2	105201	35 AMP SPST RELAY	3
3	105202	50 AMP SPST RELAY	1
4	105203	BLOCKING DIODE KEYED	5
5	105204	RESISTOR 68OHM	1
6	105832	CIRCUIT BREAKER 30A	1
7	105843	5A MINI FUSE	2
8	105844	15A MINI FUSE	1
9	105876	7.5A MINI FUSE	1
10	101067	SPST SWITCH	1

Not for Reproduction

©2017 Allmand™ Bros., Inc.

5.5 - Electric Winch Control

SN 39-000001 and UP

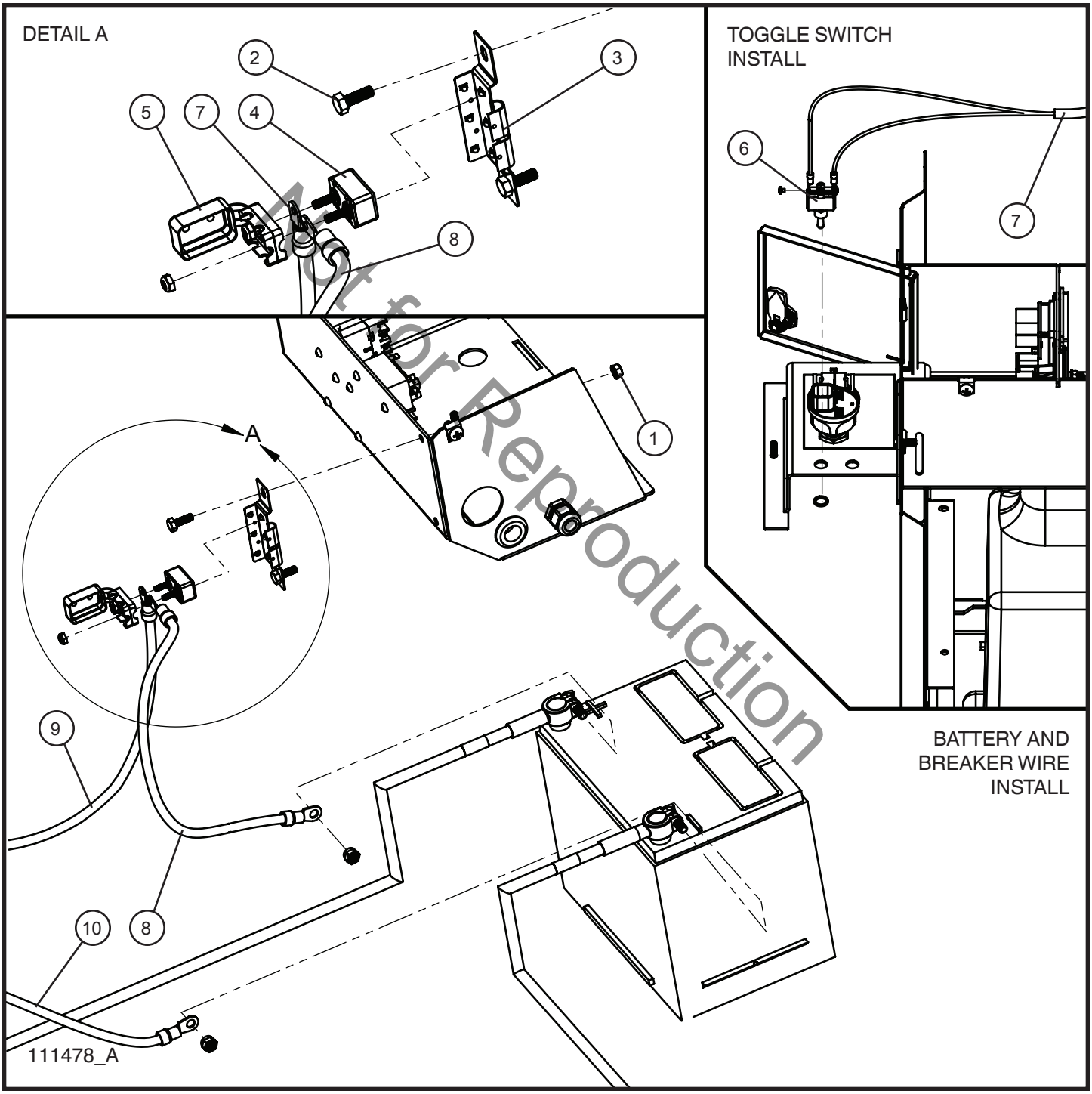

Not for Reproduction

©2017 Allmand™ Bros., Inc.

5.5 - Electric Winch Control

SN 39-000001 and UP

Item	Part No.	Part Description	Qty.
1	044021	1/4-20 KEPS HEX NUT PL	2
2	102573	1/4-20 x 3/4 HEX HEAD BOLT	2
3	112292	SHORT STOP BREAKER BRACKET	1
4	112290	50AMP 12V SHORT STOP CIRCUIT BREAKER	1
5	102698	RED BOOT CIRCUIT BREAKER COVER	1
6	102453	TOGGLE SWITCH SINGLE POLE	1
7	112366	16/2 ELECTRIC WINCH TO TOGGLE SWITCH CORD	1
8	112364	BATTERY TO SHORT STOP BREAKER RED 6 AWG WIRE	1
9	110046	ELECTRIC WINCH TO SHORT STOP BREAKER RED 6 AWG WIRE	1
10	112277	ELECTRIC WINCH TO BATTERY BLACK 6 AWG WIRE	1
NS	110117	SCHEMATIC ELECTRIC WINCH	1

*NS - NOT SHOWN

Not for Reproduction

©2017 Allmand™ Bros., Inc.

5.6 - Circuit Breaker Box (1 of 2)

SN 39-000001 and UP

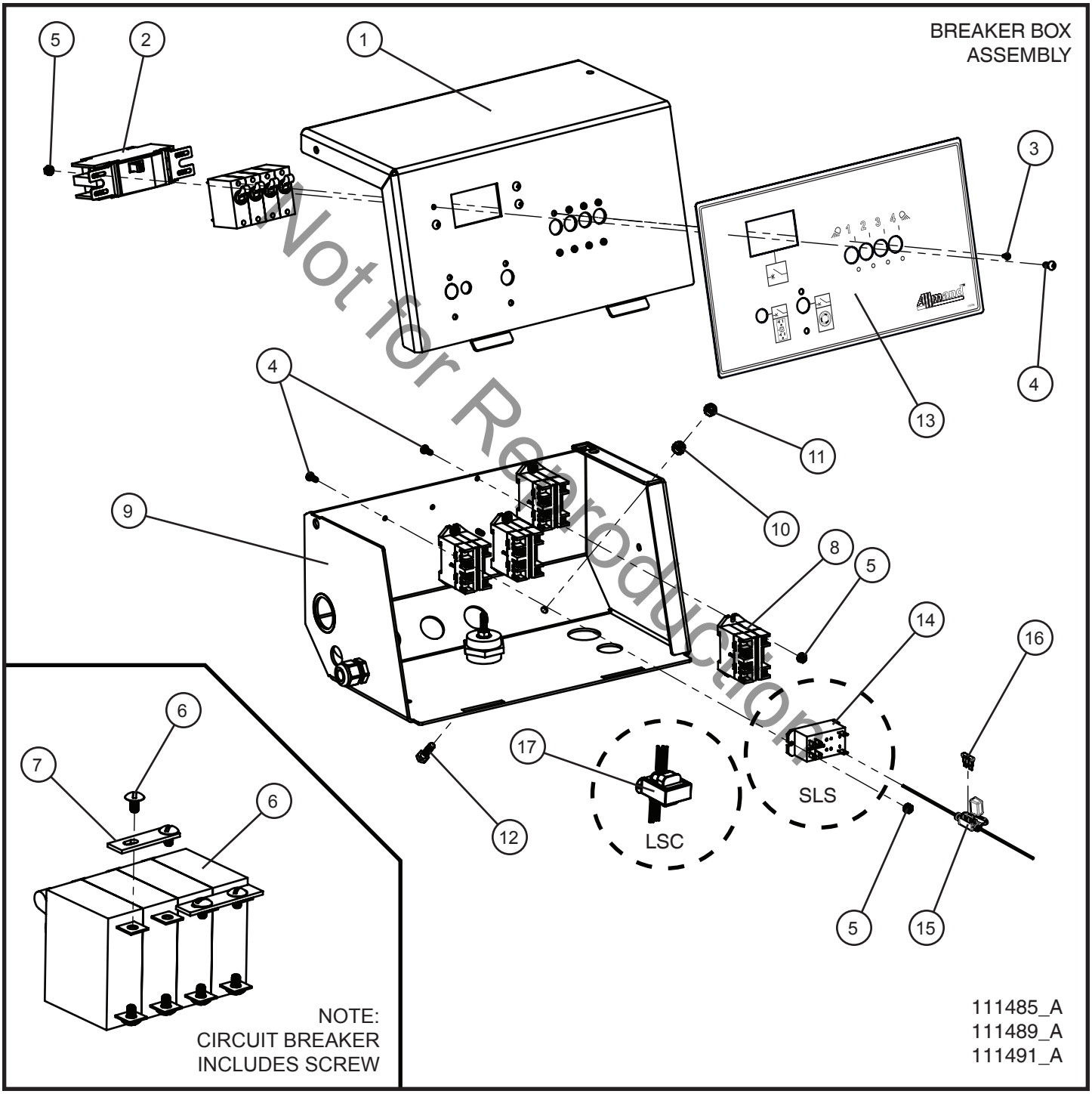

Not for Reproduction

©2017 Allmand™ Bros., Inc.

5.6 - Circuit Breaker Box (1 of 2)

SN 39-000001 and UP

Item	Part No.	Part Description	Qty.
1	111431P	CIRCUIT BREAKER BOX PANEL	1
2	350354	35 AMP DOUBLE POLE BREAKER	1
3	041018	#6-32 x 1/4 PH-ROUND HEAD MS PL MACHINE SCREW	8
4	041012	SCREW MS #8-32 x 1/2 PL	14
5	044003	#8-32 NC KEPS NUT	14
6	330458	15 AMP SPST BREAKER SWITCH	4
7	620560	BUSS BAR	2
8	109025	RELAY 277VAC 30 AMP 12VDC COIL	4
9	111430P	CIRCUIT BREAKER BOX	1
10	044021	1/4-20 KEPS HEX NUT PL	1
11	044023	1/4-20 NYLOCK HEX NUT PL	1
12	046015	1/4-20 x 1 HEX HEAD CS GR5 PL	1
13	110299	DECAL BREAKER BOX	1
14	105219	RELAY 30 AMP	1
15	103864	FUSE HOLDER INLINE BLADE	1
16	104990	FUSE BLADE 2 AMP ATO/ATC	1
17	108057	POWER FILAMENT 266 SERIES	1
NS	112035	SCHEMATIC MAIN BREAKER TO LIGHT	1

*NS - NOT SHOWN

Not for Reproduction

©2017 Allmand™ Bros., Inc.

5.6 - Circuit Breaker Box (2 of 2)

SN 39-000001 and UP

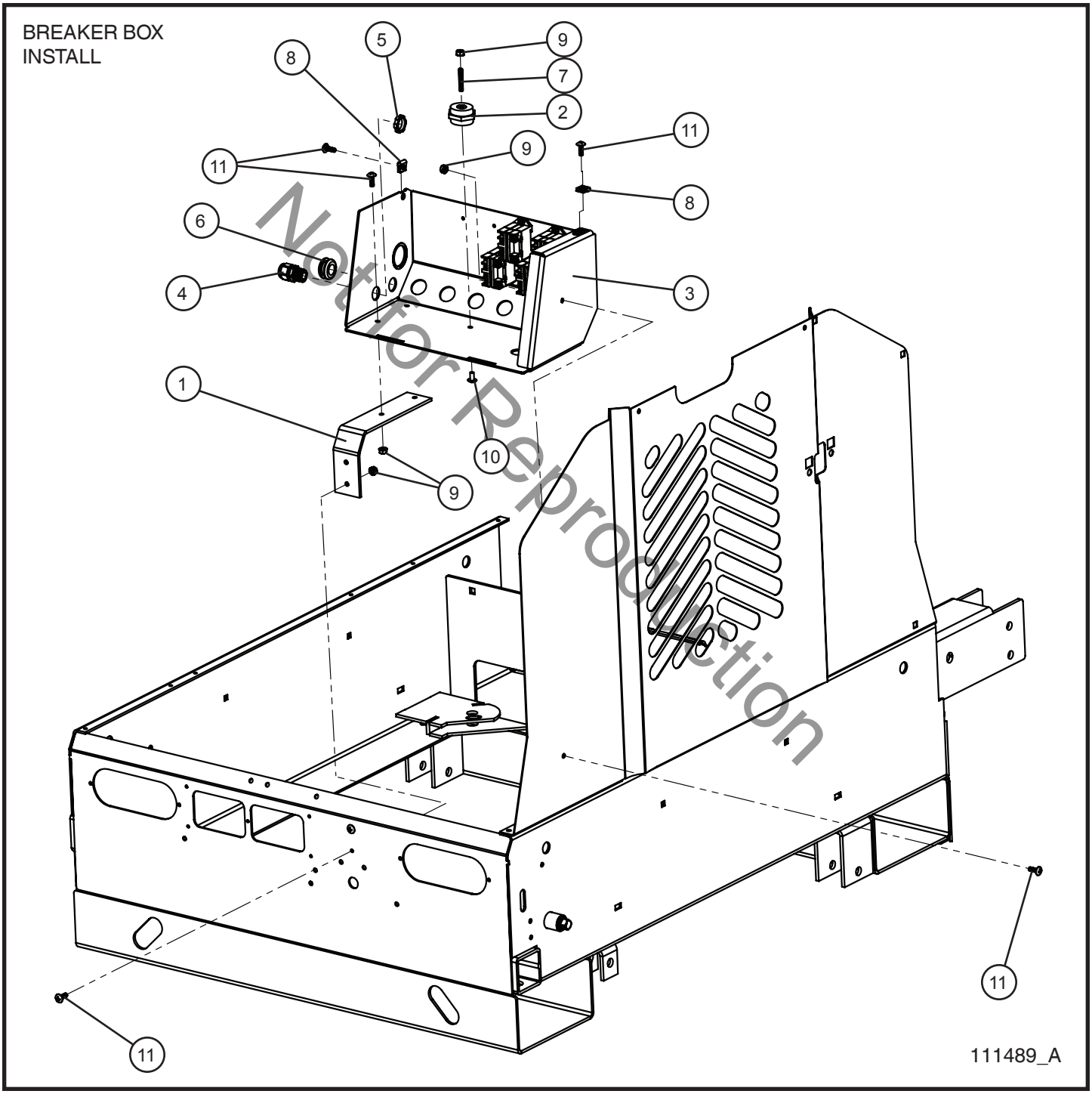

Not for Reproduction

©2017 Allmand™ Bros., Inc.

5.6 - Circuit Breaker Box (2 of 2)

SN 39-000001 and UP

Item	Part No.	Part Description	Qty.
1	111429P	CIRCUIT BREAKER BOX MOUNT	1
2	106318	LOW VOLTAGE INSULATOR 1-1/4”, 1/4-20	1
3	111430P	CIRCUIT BREAKER BOX	1
4	105626	CORD GRIP 1/2” NYLON BLACK	1
5	022035	1/2 CORD GRIP NUT	1
6	330463	11/16 RUBBER GROMMET	1
7	045003	1/4-20 x 1-1/2 STUD PL	1
8	045216	1/4-20 TINNERMAN NUT	2
9	044021	1/4-20 KEPS HEX NUT PL	6
10	041078	1/4-20 x 1/2 PH-TRUSS HEAD MS SS	1
11	041050	1/4-20 x 3/4 PH-TRUSS HEAD MS SS MACHINE SCREW	7

Not for Reproduction

©2017 Allmand™ Bros., Inc.

5.7 - 20A GFCI and 30A Twistlock Outlets Install Group

SN 39-000001 and UP

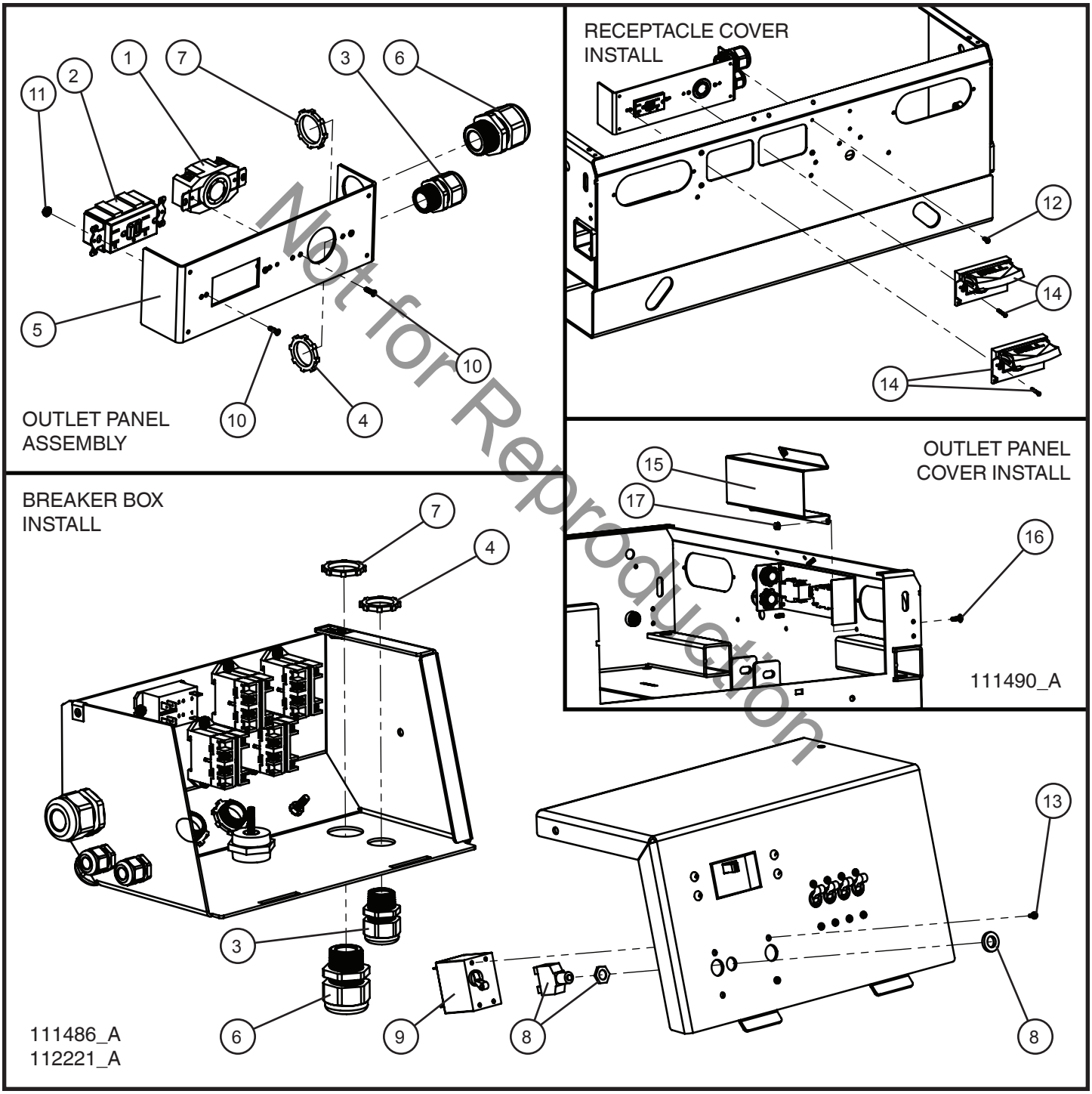

Not for Reproduction

©2017 Allmand™ Bros., Inc.

5.7 - 20A GFCI and 30A Twistlock Outlets Install Group

SN 39-000001 and UP

Item	Part No.	Part Description	Qty.
1	653102	4-PRONG 30A 125-250V TWISTLOCK RECEPTACLE	1
	330491	3-PRONG 30A 250V TWISTLOCK RECEPTACLE	1
2	330499	20A GFCI RECEPTABLE	1
3	105916	3/4” CORD GRIP NYLON	2
4	022036	3/4” CORD GRIP NUT	2
5	111476P	OUTLET PANEL	1
6	105627	1” CORD GRIP NYLON	2
7	022038	1” CORD GRIP NUT	2
8	650138	CIRCUIT BREAKER 20A PUSH BUTTON	1
9	330456	30A DPST CIRCUIT BREAKER	1
10	041259	#6-32 x 1/2 PH-FLAT HEAD MS PL	4
11	044004	#6-32 KEPS HEX NUT PL	4
12	041021	#10-24 x 1/2 PH-ROUND HEAD MS PL	4
13	041018	#6-32 x 1/4 PH-ROUND HEAD MS PL	2
14	112278	HORIZONTAL WEATHERPROOF COVER	2
15	111477P	OUTLET PANEL COVER	1
16	041050	1/4-20 x 3/4 PH-TRUSS HEAD MS SS MACHINE SCREW	3
17	044021	1/4-20 KEPS HEX NUT PL	3
NS	112037	1-GFCI, 1-30A OUTLET PANEL SCHEMATIC	1
NS	110439	CORD 10/4 240V TWISTLOCK	1
NS	110438	CORD 12/3 GFCI OUTLET	1

*NS - NOT SHOWN

Not for Reproduction

©2017 Allmand™ Bros., Inc.

5.8 - 30A RV Plug Adapter

SN 39-000001 and UP

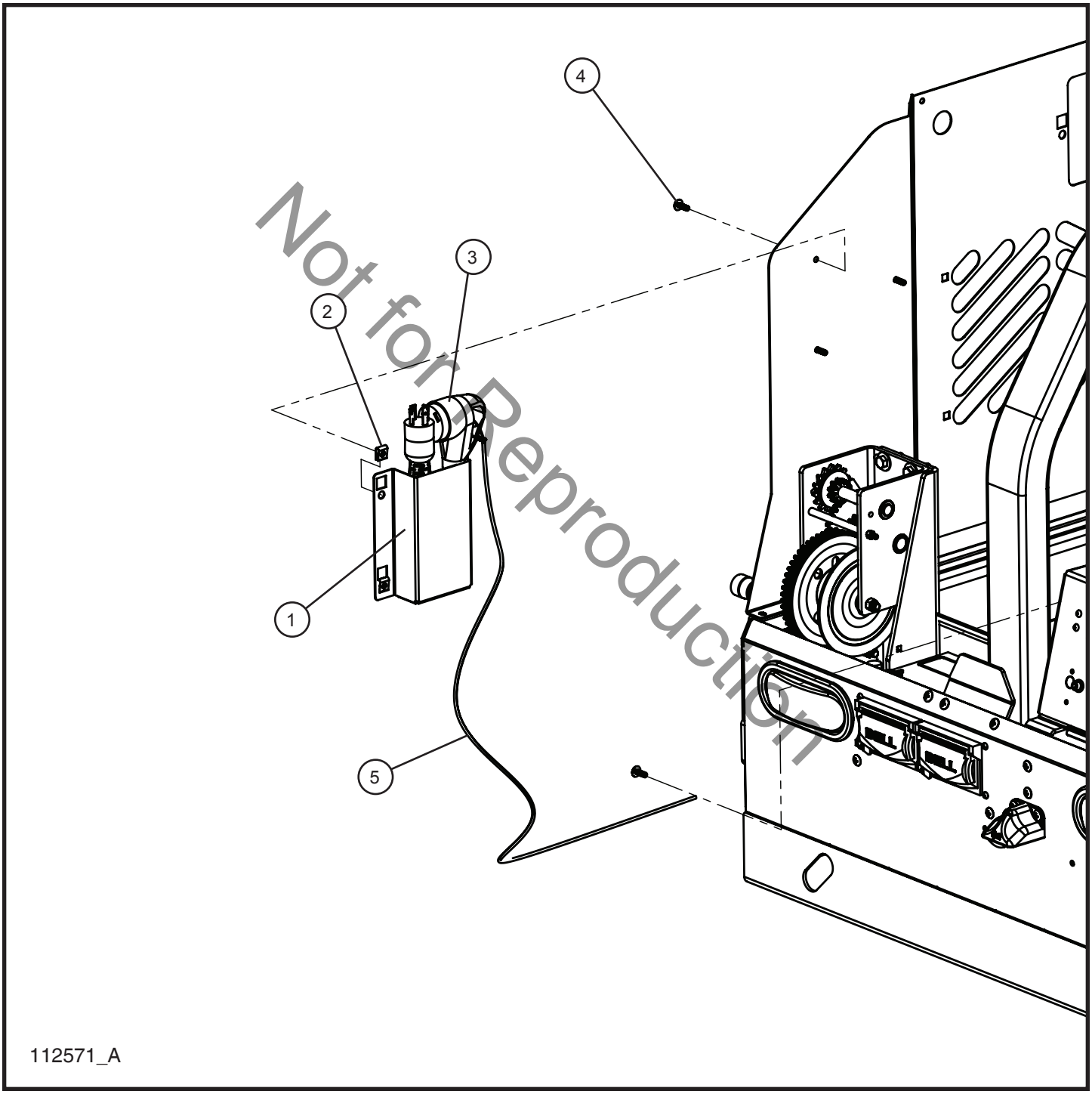

Not for Reproduction

©2017 Allmand™ Bros., Inc.

5.8 - 30A RV Plug Adapter

SN 39-000001 and UP

Item	Part No.	Part Description	Qty.
1	112403P	RV PLUG ADAPTER TRAY	1
2	045216	1/4-20 TINNERMAN NUT	3
3	112400	RV PLUG ADAPTER	1
4	041050	1/4-20 x 3/4 PH-TRUSS HEAD MACHINE SCREW	3
5	112402	LANYARD 36 INCHES	1

Not for Reproduction

©2017 Allmand™ Bros., Inc.

5.9 - Emergency Stop

SN 39-000001 and UP

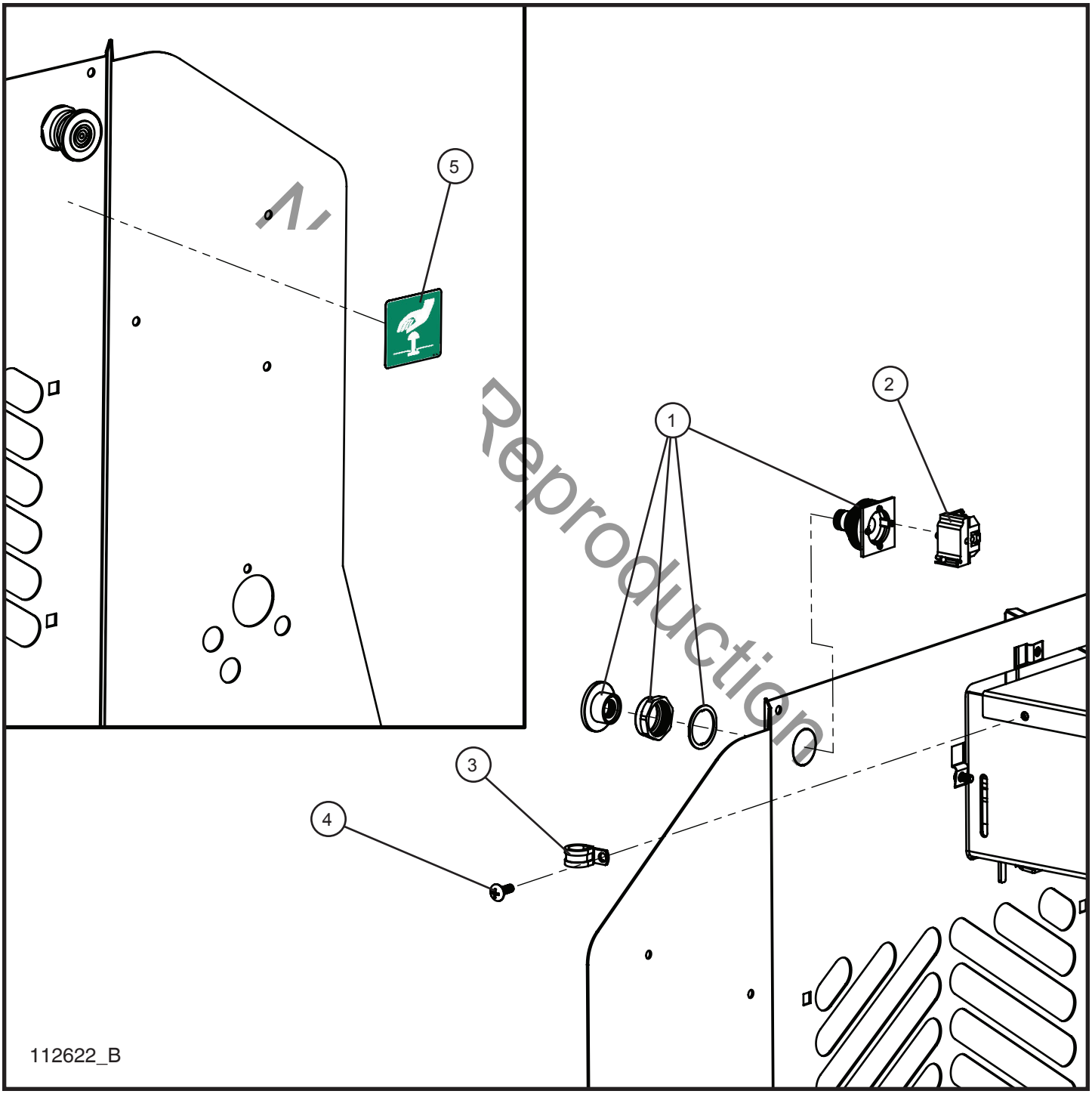

Reproduction

©2017 Allmand™ Bros., Inc.

5.9 - Emergency Stop

SN 39-000001 and UP

Item	Part No.	Part Description	Qty.
1	650460	EMERGENCY STOP OPERATOR BUTTON	1
2	650461	EMERGENCY STOP CONTACT BLOCK	1
3	022021	#10 CUSH CLAMP	1
4	041050	1/4-20 x 3/4 PH-TRUSS HEAD MS SS MACHINE SCREW	1
5	105567	EMERGENCY STOP DECAL	1
NS	108867	EMERGENCY STOP SCHEMATIC	1
NS	105991	EMERGENCY STOP WIRE HARNESS	1

*NS - NOT SHOWN

Not for Reproduction

©2017 Allmand™ Bros., Inc.

6.1 - Engine Mounting Group

SN 39-000001 and UP

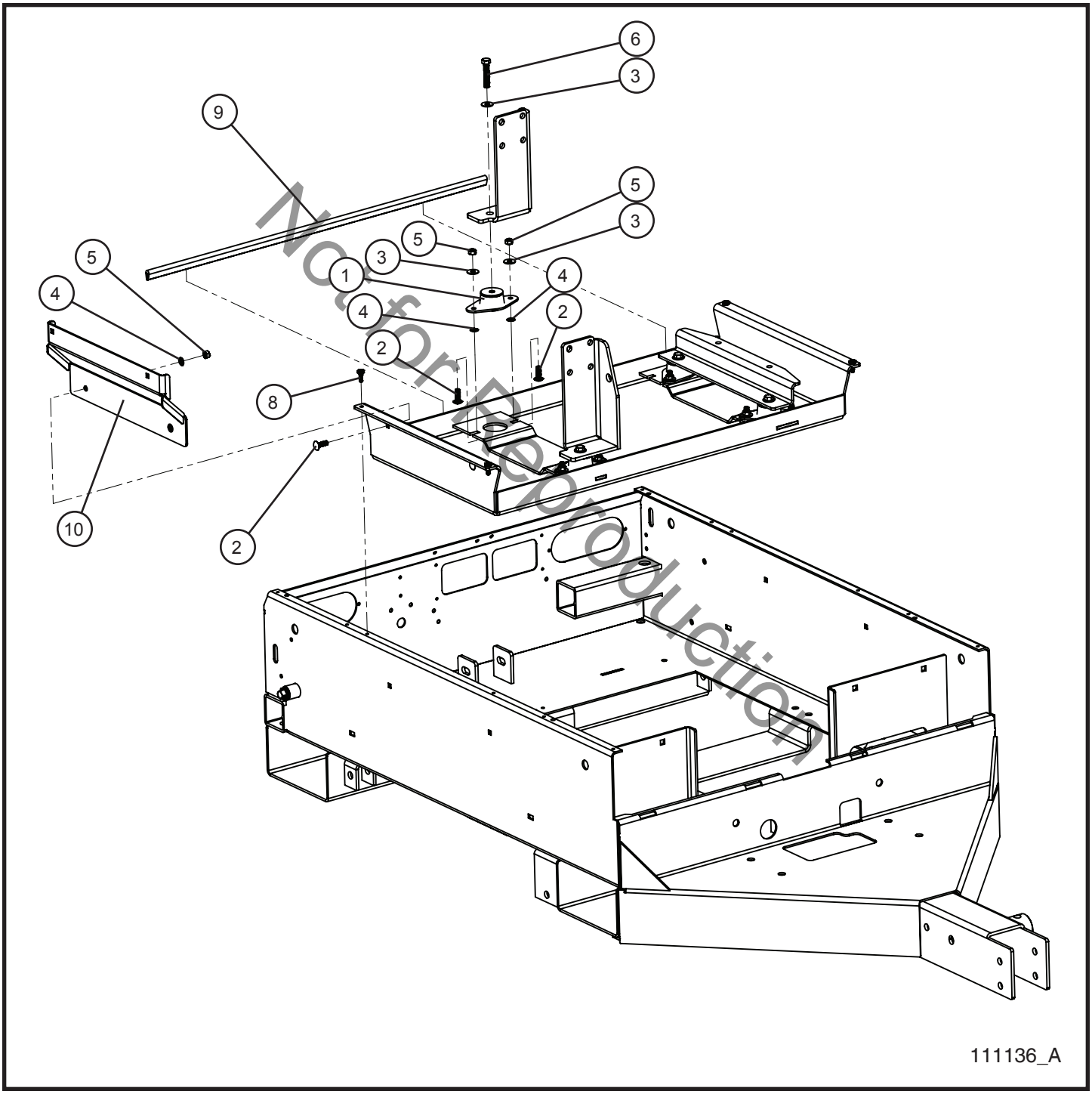

Not for Reproduction

©2017 Allmand™ Bros., Inc.

6.1 - Engine Mounting Group

SN 39-000001 and UP

Item	Part No.	Part Description	Qty.
1	107028	ENGINE ISOLATOR THREADED MOUNT LIGHT DUTY	4
2	053020	5/16-18 x 1 CARRIAGE BOLT PL	10
3	047010	5/16 FLAT WASHER PL	12
4	045217	5/16 PUSH NUT	10
5	044033	5/16-18 NYLOCK HEX NUT PL	10
6	046133	3/8-16 x 2 HEX HEAD CS GR8 PL	4
7	109857	ENGINE TRAY	1
8	041070	1/4-20-3/4 SLOTTED HEX WASHER HEAD MS TP F	4
9	030054	TRIMLOK 3/16 x 3/4 x 32.00	1
10	110393P	LOWER RADIATOR LOWER	1
NS	112724	LIGHT DUTY ENGINE MOUNT SERVICE KIT	1

*NS - NOT SHOWN

Not for Reproduction

©2017 Allmand™ Bros., Inc.

6.2 - Coolant Reservoir Tank

SN 39-000001 and UP

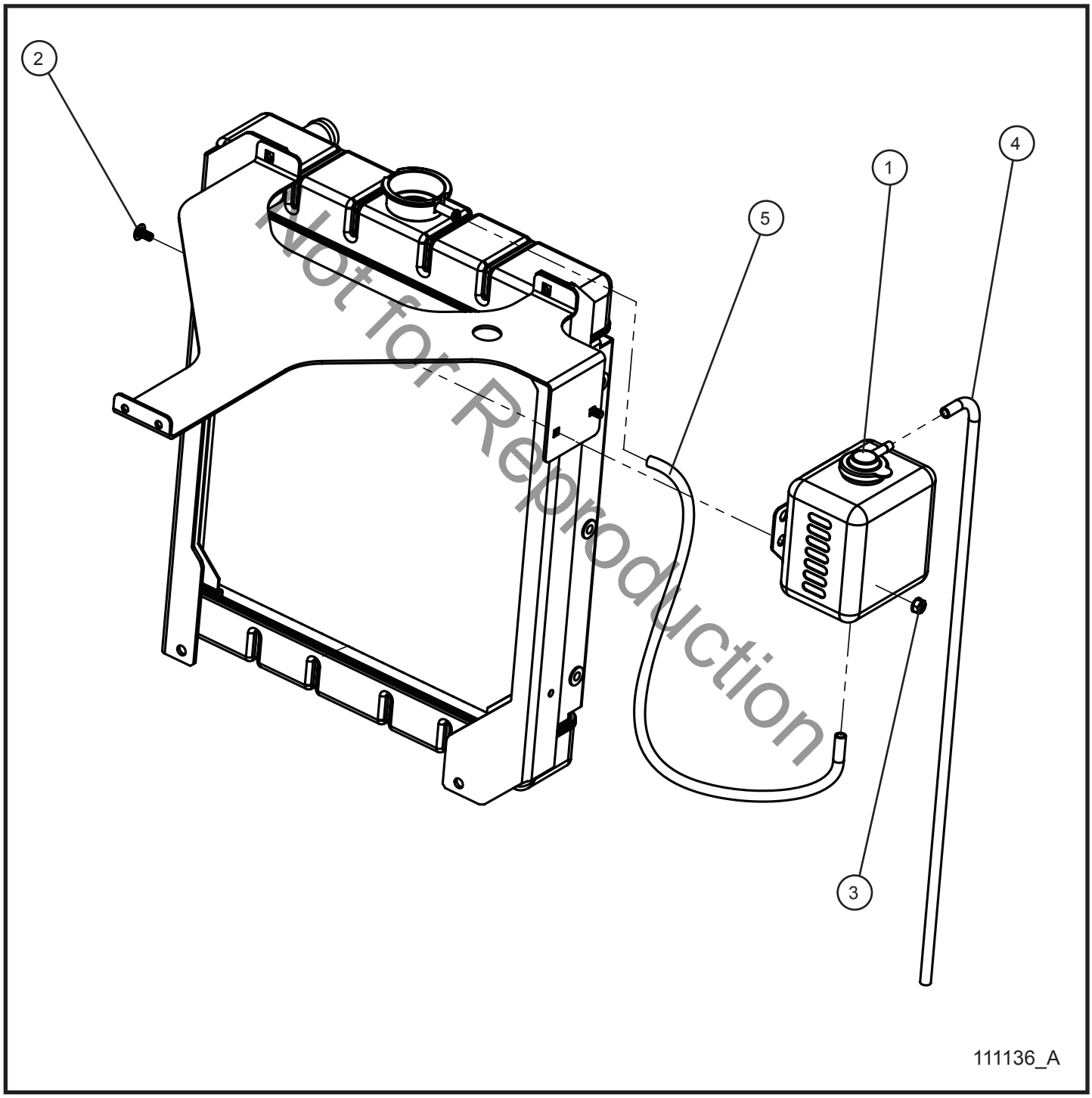

Not for Reproduction

©2017 Allmand™ Bros., Inc.

6.2 - Coolant Reservoir Tank

SN 39-000001 and UP

Item	Part No.	Part Description	Qty.
1	650027	RESERVOIR WITH BRACKET	1
2	053005	1/4-20 x 1/2 CARRIAGE BOLT PL	2
3	044021	1/4-20 KEPS HEX NUT PL	2
4	102268	COOLANT HOSE 1/4 x 44.0	1
5	102268	COOLANT HOSE 1/4 x 28.0	1

Not for Reproduction

©2017 Allmand™ Bros., Inc.

6.3 - Kubota Engine Assembly Group (1 of 3)

SN 39-000001 and UP

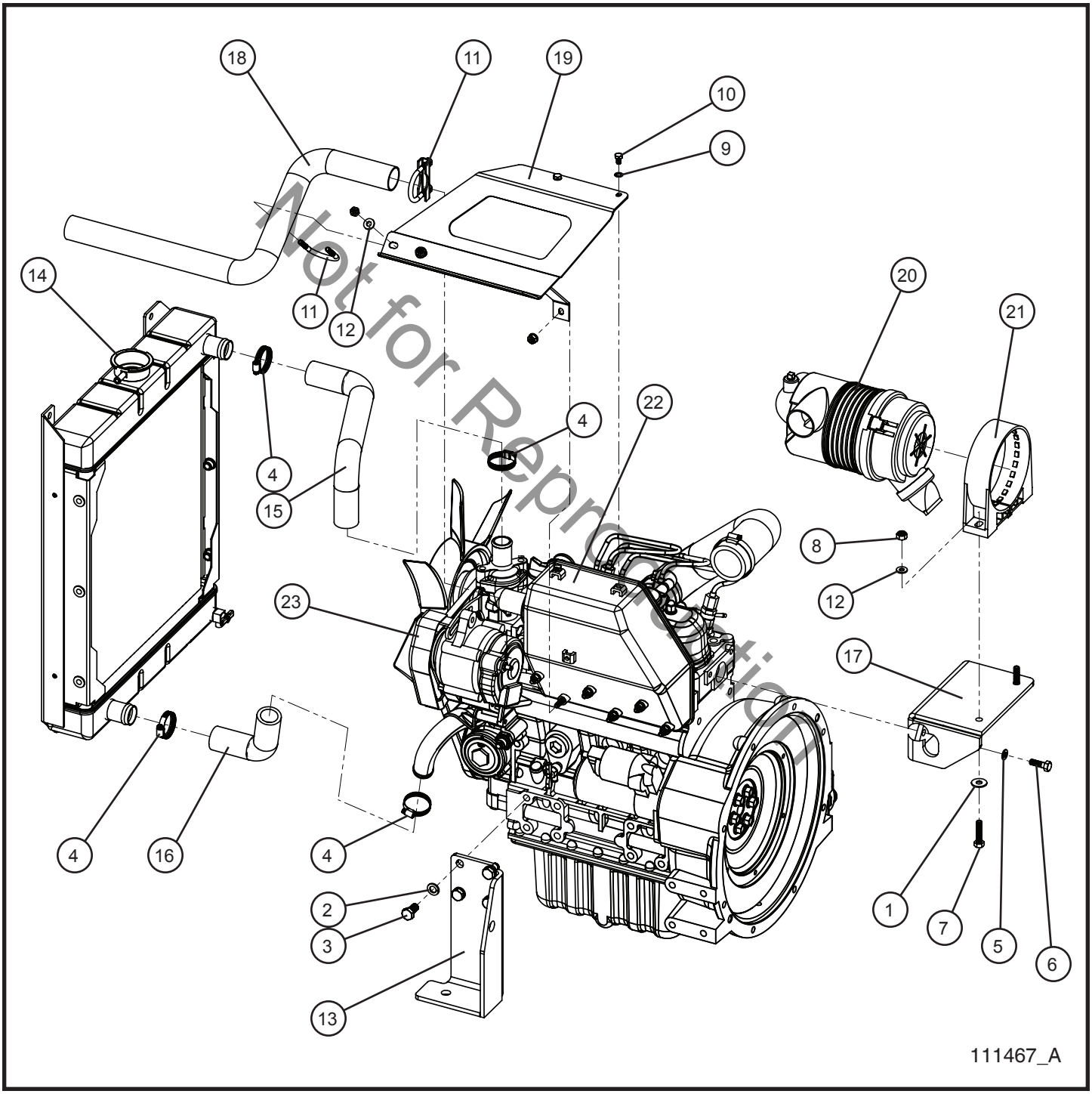

Not for Reproduction

©2017 Allmand™ Bros., Inc.

6.3 - Kubota Engine Assembly Group (1 of 3)

SN 39-000001 and UP

Item	Part No.	Part Description	Qty.
1	047010	5/16 FLAT WASHER PL	8
2	042151	M10 SPLIT LOCK WASHER PL	4
3	042038	M10 x 20MM x 1.25MM HEX HEAD CS GR 8.8 PL	4
4	045034	#16 HOSE CLAMP	4
5	102131	M8 SPLIT LOCK WASHER PL	2
6	042031	M8 x 25MM x 1.25 HEX HEAD CS GR8.8 PL	2
7	102127	8MM x 35MM x 1.25 HEX GR 8.8 PLATED	2
8	042081	M8 x 1.25MM NYLOCK HEX NUT PL METRIC	2
9	043050	1/4 INTL TOOTH LOCK WASHER	2
10	042018	M6 x 1.0MM x 10MM HEX HEAD CS GR 8.8 PL	2
11	713086	1 3/8 MUFFLER CLAMP	2
12	047005	1/4 FLAT WASHER	4
13	103470P	BRACKET ENGINE FOOT RIGHT WELDMENT KUBOTA	1
14	105393	RADIATOR KUBOTA	1
15	107119	RADIATOR HOSE UPPER KUBOTA	1
16	107120	RADIATOR HOSE LOWER KUBOTA	1
17	107356P	MOUNT WELDED AIR FILTER	1
18	109800	TAIL PIPE KUBOTA	1
19	103579P	TAILPIPE MOUNT D1105 NL PRO II	1
20	650262	AIR CLEANER RADIAL SEAL	1
	650290	AIR FILTER	1
21	650263	MOUNTING BAND AIR CLEANER	1
22	352139	BOX MUFFLER	1
23	104479	ENGINE D1005 NRTC/NTE KUBOTA	1
NS	045038	#32 HOSE CLAMP	2
NS	101734	AIR CLEANER HOSE KUBOTA D1005/D1105	1
NS	107347	RADIATOR KIT KUBOTA (INCLUDES PART NUMBERS 105393, 107119, & 107120)	1
NS	108043	HARNESS KUBOTA	1
NS	105875	KUBOTA CHARGE CIRCUIT FUSE	1
NS	108044	KUBOTA ENGINE HARNESS SCHEMATIC	1

*NS - NOT SHOWN

Not for Reproduction

©2017 Allmand™ Bros., Inc.

6.3 - Kubota Engine Assembly Group (2 of 3)

SN 39-000001 and UP

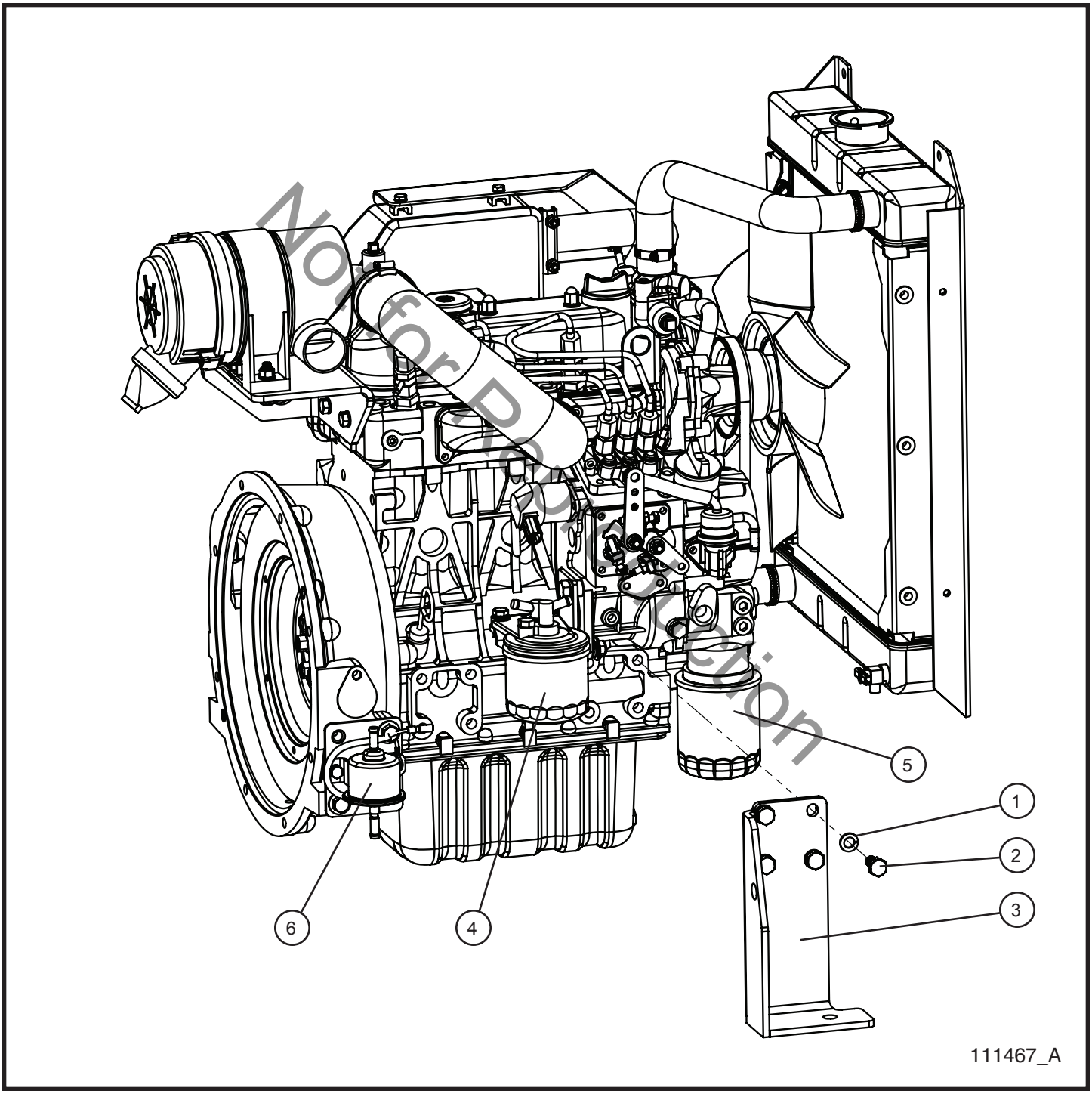

©2017 Allmand™ Bros., Inc.

6.3 - Kubota Engine Assembly Group (2 of 3)

SN 39-000001 and UP

Item	Part No.	Part Description	Qty.
1	042151	M10 SPLIT LOCK WASHER PL	4
2	042038	M10 x 20MM x 1.25MM HEX HEAD CS GR 8.8 PL	4
3	103469P	BRACKET ENGINE FOOT LEFT WELDMENT KUBOTA	1
4	920745	FUEL FILTER	1
5	920743	OIL FILTER	1
6	103331	FUEL PUMP	1
NS	108962	KUBOTA FILTER KIT (INCLUDES PART NUMBERS 920745, 920743, & 650290)	1
NS	340302	HIGH TEMP SWITCH	1
NS	340301	OIL PRESSURE SWITCH	1
NS	920751	FUEL SHUT OFF SOLENOID	1

*NS - NOT SHOWN

Not for Reproduction

©2017 Allmand™ Bros., Inc.

6.3 - Kubota Engine Assembly Group (3 of 3)

SN 39-000001 and UP

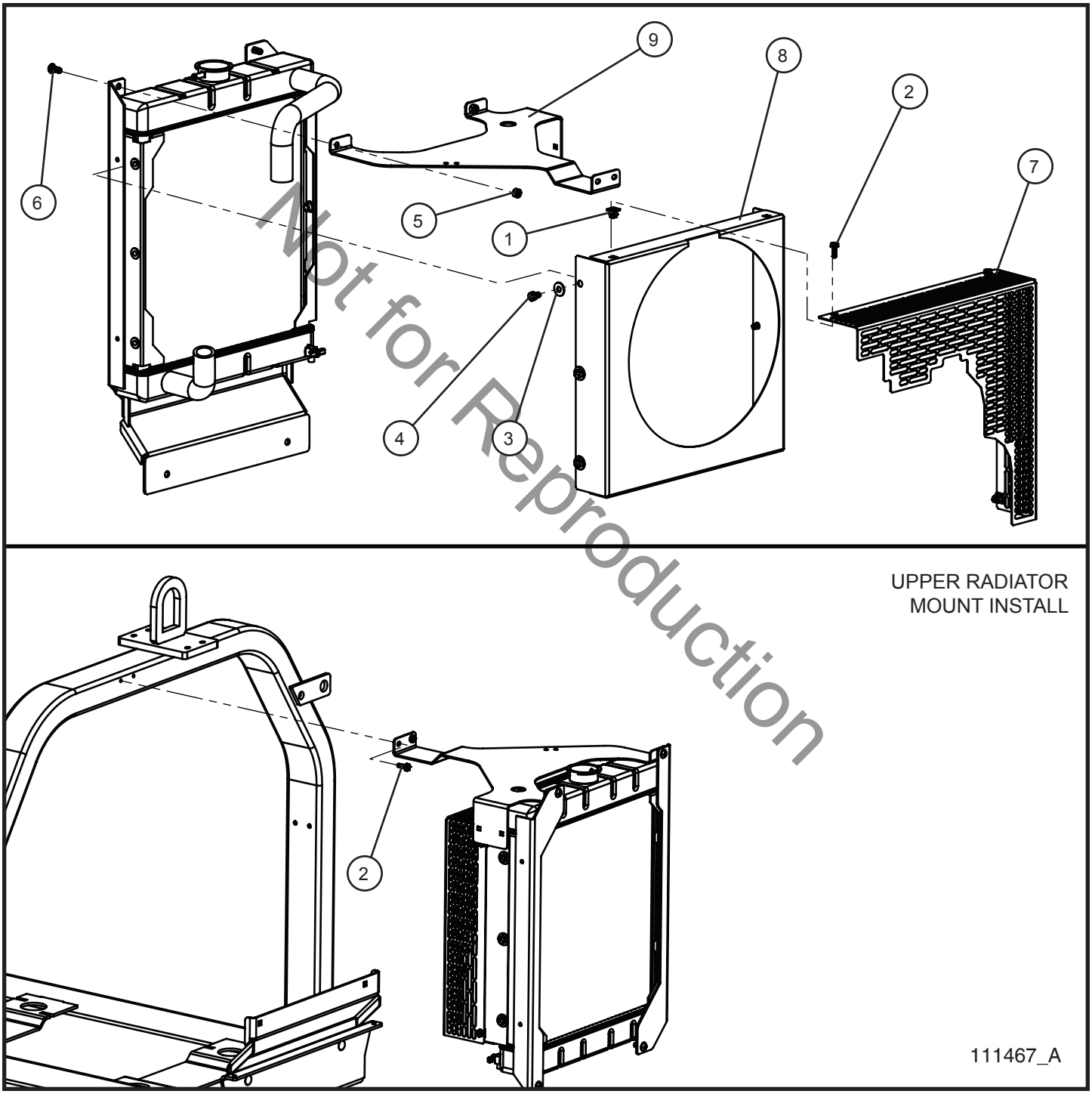

Not for Reproduction

©2017 Allmand™ Bros., Inc.

6.3 - Kubota Engine Assembly Group (3 of 3)

SN 39-000001 and UP

Item	Part No.	Part Description	Qty.
1	105408	GROMMET NUT DOUBLE SPLIT	4
2	041070	1/4-20 x 3/4 SL-HEX WASHER HEAD MS TP F	6
3	047010	5/16 FLAT WASHER PL	6
4	046046	5/16-18 x 1/2 HEX HEAD CS GR5 PL	6
5	044033	5/16-18 NYLOCK HEX NUT PL	4
6	041071	SCREW MACHINE PHILLIPS HEAD ROUND 5/16-18 x 3/4 PLATED	4
7	110318P	FINGER GUARD KUBOTA	1
8	107184P	FAN SHROUD SHORT JB RADIATOR	1
9	112413P	TOP RADIATOR MOUNT	1

Not for Reproduction

©2017 Allmand™ Bros., Inc.

6.4 - Kubota Oil Line

SN 39-000001 and UP

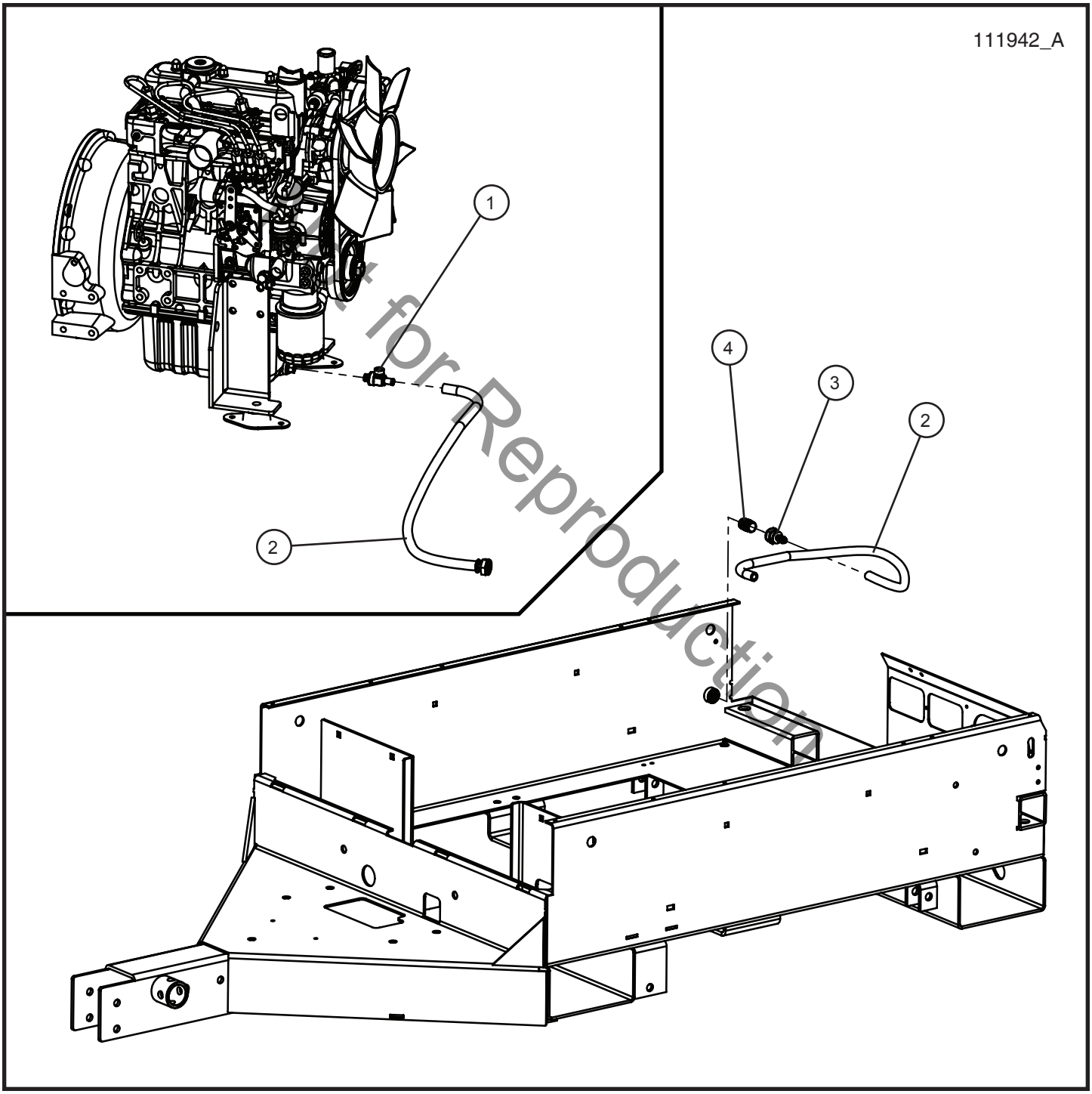

Not for Reproduction

©2017 Allmand™ Bros., Inc.

6.4 - Kubota Oil Line

SN 39-000001 and UP

Item	Part No.	Part Description	Qty.
1	848299	DRAIN VALVE M12 x 1.5 - 3/8 HOSE	1
2	081017	3/8 YELLOW FUEL HOSE x 26 INCHES	1
3	104865	3/8 HOSE x 1/2 NPT BARBED TO FEMALE	1
4	610215	1/2 NPT NIPPLE	1

Not for Reproduction

©2017 Allmand™ Bros., Inc.

6.5 - Mitsubishi Engine Assembly Group (1 of 4)

SN 39-000001 and UP

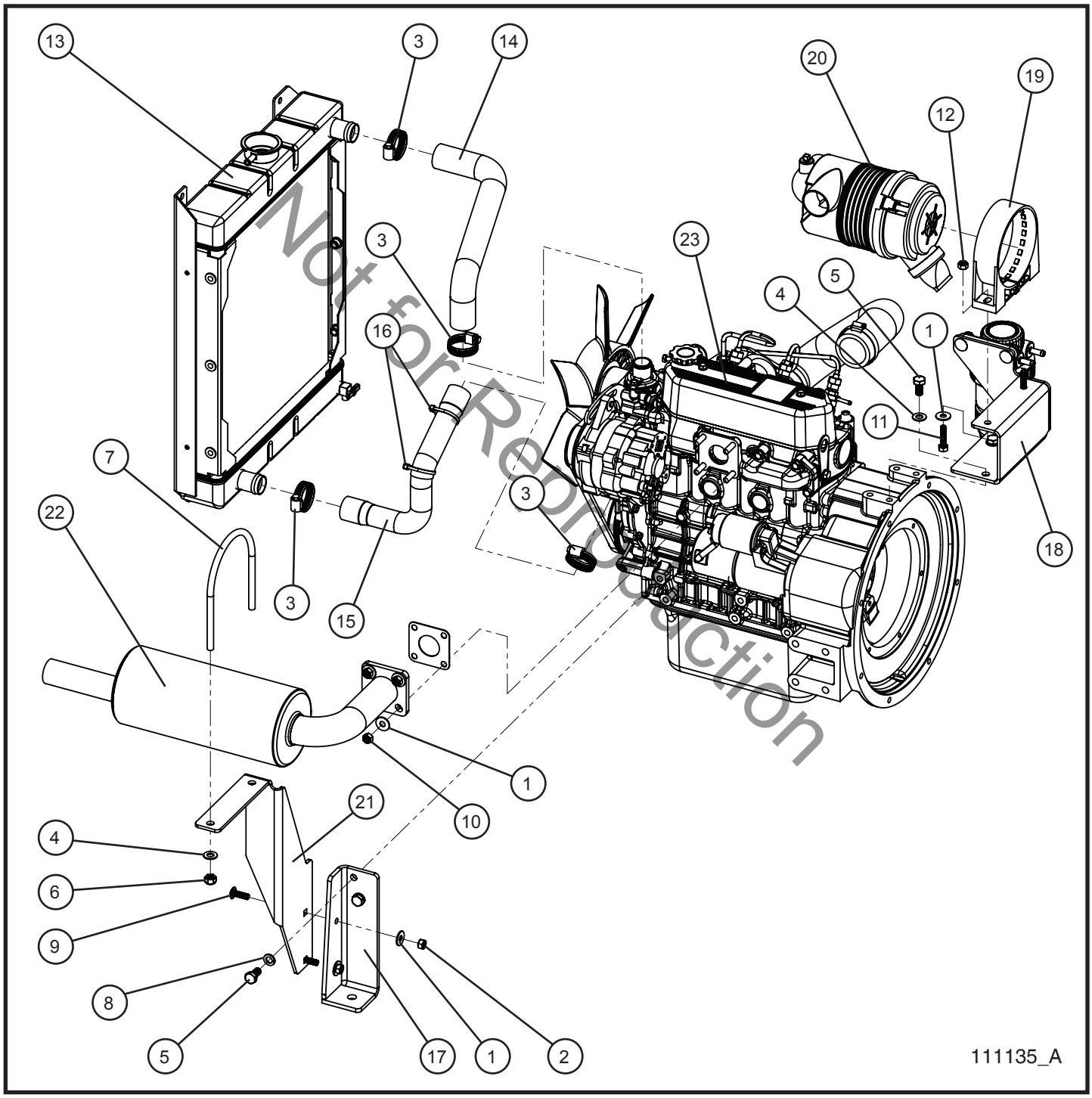

Not for Reproduction

©2017 Allmand™ Bros., Inc.

6.5 - Mitsubishi Engine Assembly Group (1 of 4)

SN 39-000001 and UP

Item	Part No.	Part Description	Qty.
1	047010	5/16 FLAT WASHER PL	8
2	044033	5/16-18 NYLOCK HEX NUT PL	2
3	045035	#20 HOSE CLAMP	4
4	047016	3/8 FLAT WASHER SAE ZINC	4
5	042038	M10 x 20mm x 1.25mm HEX HEAD CS GR8.8 PL	4
6	044080	3/8-16 TOP LOCK HEX NUT PL	2
7	105744	4.75” MUFFLER U-BOLT	1
8	042151	M10 SPLIT LOCK WASHER PL	2
9	053020	5/16-18 x 1 CARRIAGE BOLT PL	2
10	042079	M8 x 1.25 GR8 TOP LOCK NUT	4
11	102127	8mm x 35mm x 1.25 HEX GR8.8 PLATED	2
12	042081	M8 x 1.25mm NYLOCK HEX NUT PL METRIC	2
13	105393	RADIATOR SMALL ENGINES 1.0L / 1.1L	1
14	108241	RADIATOR HOSE UPPER MITSUBISHI L3E	1
15	108435	RADIATOR HOSE LOWER MITSUBISHI L3E	1
16	068090	CABLE TIE 8	2
17	108239P	ENGINE BRACKET RIGHT WELDMENT	1
18	108690P	AIR CLEANER BRACKET WELDMENT NL5000	1
19	650263	MOUNTING BAND AIR CLEANER	1
20	650262	AIR CLEANER RADIAL SEAL	1
	650290	AIR FILTER	1
21	108246P	MUFFLER BRACKET	1
22	108245	MUFFLER MITSUBISHI L3E	1
23	108377	MITSUBISHI L3E TIER 4 FINAL ENGINE	1
NS	108311	SCHEMATIC ENGINE HARNESS	1
NS	108041	ENGINE HARNESS MISTUBISHI L3E	1
NS	108369	CHARGE CIRCUIT FUSE 40AMP	1

*NS - NOT SHOWN

Not for Reproduction

©2017 Allmand™ Bros., Inc.

6.5 - Mitsubishi Engine Assembly Group (2 of 4)

SN 39-000001 and UP

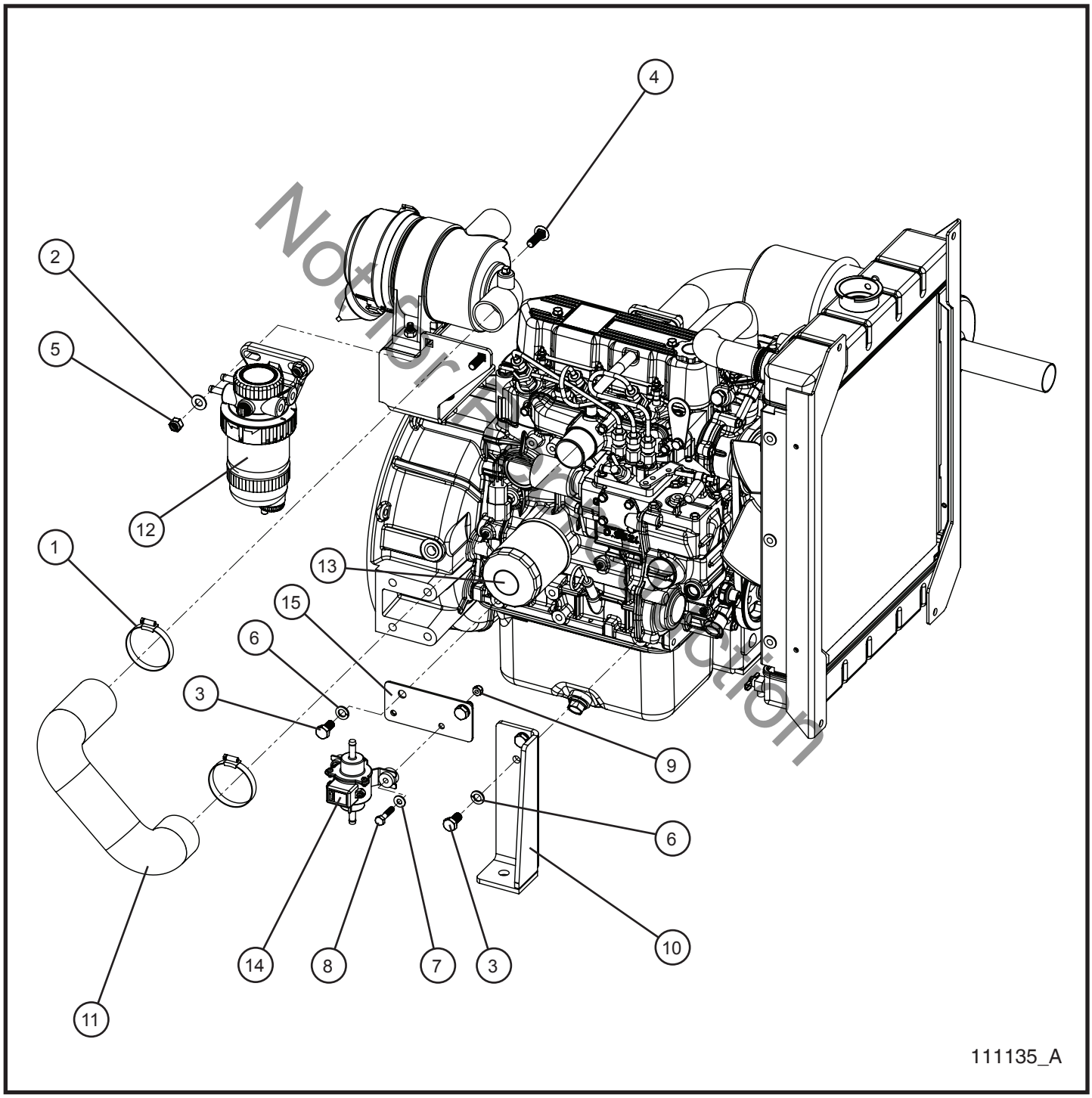

Not for Reproduction

©2017 Allmand™ Bros., Inc.

6.5 - Mitsubishi Engine Assembly Group (2 of 4)

SN 39-000001 and UP

Item	Part No.	Part Description	Qty.
1	045038	#32 HOSE CLAMP	2
2	047016	3/8 FLAT WASHER SAE ZINC	2
3	042038	M10 x 20mm x 1.25mm HEX HEAD CS GR8.8 PL	4
4	100670	3/8-16 x 1 1/4 CARRIAGE BOLT	2
5	044038	3/8-16 NYLOCK HEX NUT PL	2
6	042151	M10 SPLIT LOCK WASHER PL	4
7	047005	1/4 FLAT WASHER PL	2
8	046020	1/4-20 x 1 1/4 HEX HEAD CS GR5 PL	2
9	044023	1/4-20 NYLOCK HEX NUT PL	2
10	108266P	ENGINE BRACKET LEFT WELDMENT	1
11	101734	AIR INTAKE HOSE SMALL ENGINES	1
12	108430	FUEL FILTER	1
13	108429	OIL FILTER	1
14	108897	FUEL PUMP	1
15	108248P	FUEL PUMP BRACKET	1

Not for Reproduction

©2017 Allmand™ Bros., Inc.

6.5 - Mitsubishi Engine Assembly Group (3 of 4)

SN 39-000001 and UP

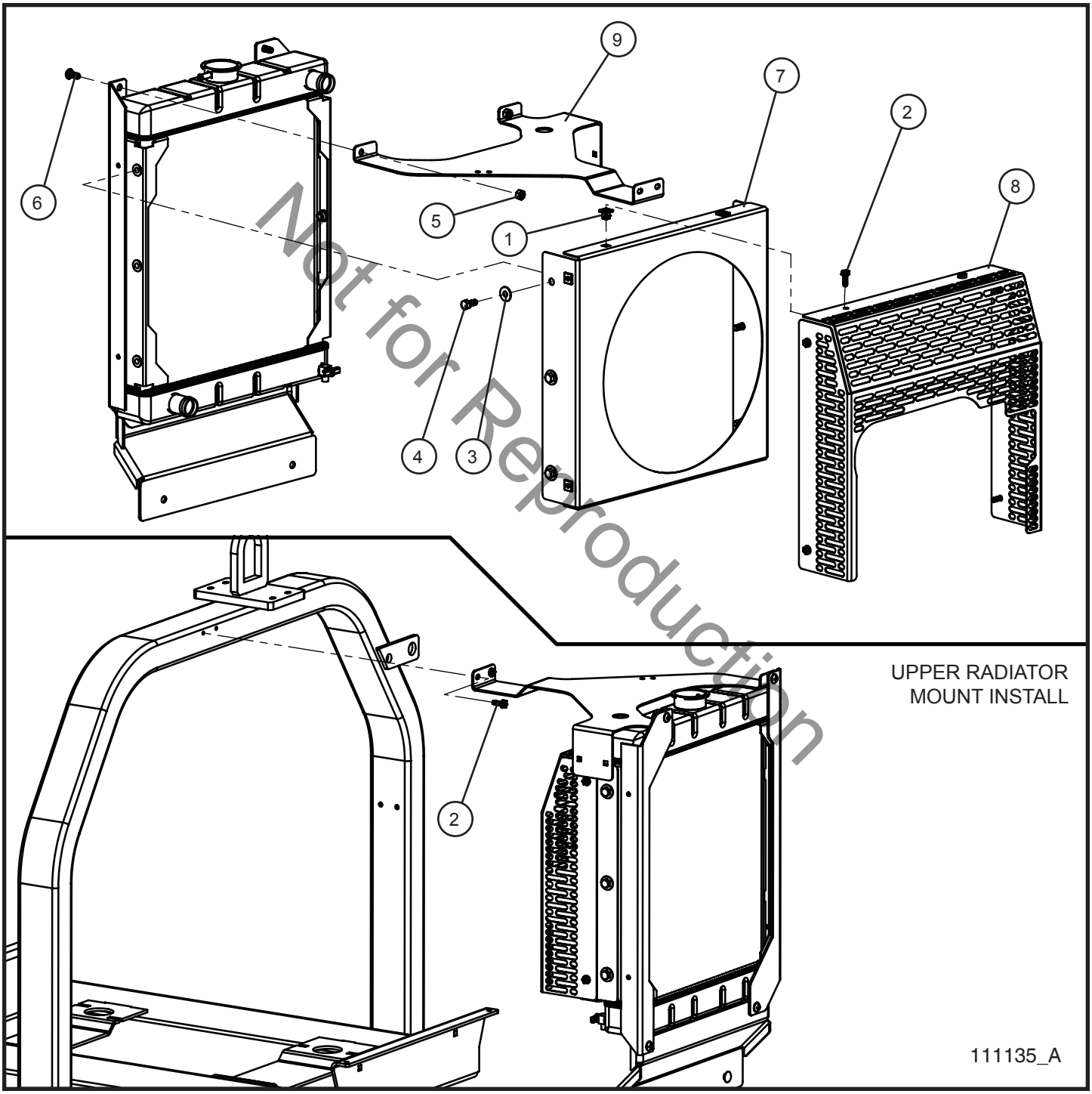

Not for Reproduction

©2017 Allmand™ Bros., Inc.

6.5 - Mitsubishi Engine Assembly Group (3 of 4)

SN 39-000001 and UP

Item	Part No.	Part Description	Qty.
1	105408	GROMMET NUT DOUBLE SPLIT	4
2	041070	1/4-20 x 3/4 SL-HEX WASHER HEAD MS TP F	6
3	047010	5/16 FLAT WASHER PL	6
4	046047	5/16-18 x 3/4 HEX HEAD CS GR5 PL	6
5	044033	5/16-18 NYLOCK HEX NUT PL	4
6	041071	SCREW MACHINE PHILLIPS HEAD ROUND 5/16-18 x 3/4 PLATED	4
7	108243P	FAN SHROUD MITSUBISHI L3E	1
8	110316P	FINGER GUARD MITSUBISHI L3E	1
9	112413P	UPPER RADIATOR MOUNT	1

Not for Reproduction

©2017 Allmand™ Bros., Inc.

6.5 - Mitsubishi Engine Assembly Group (4 of 4)

SN 39-000001 and UP

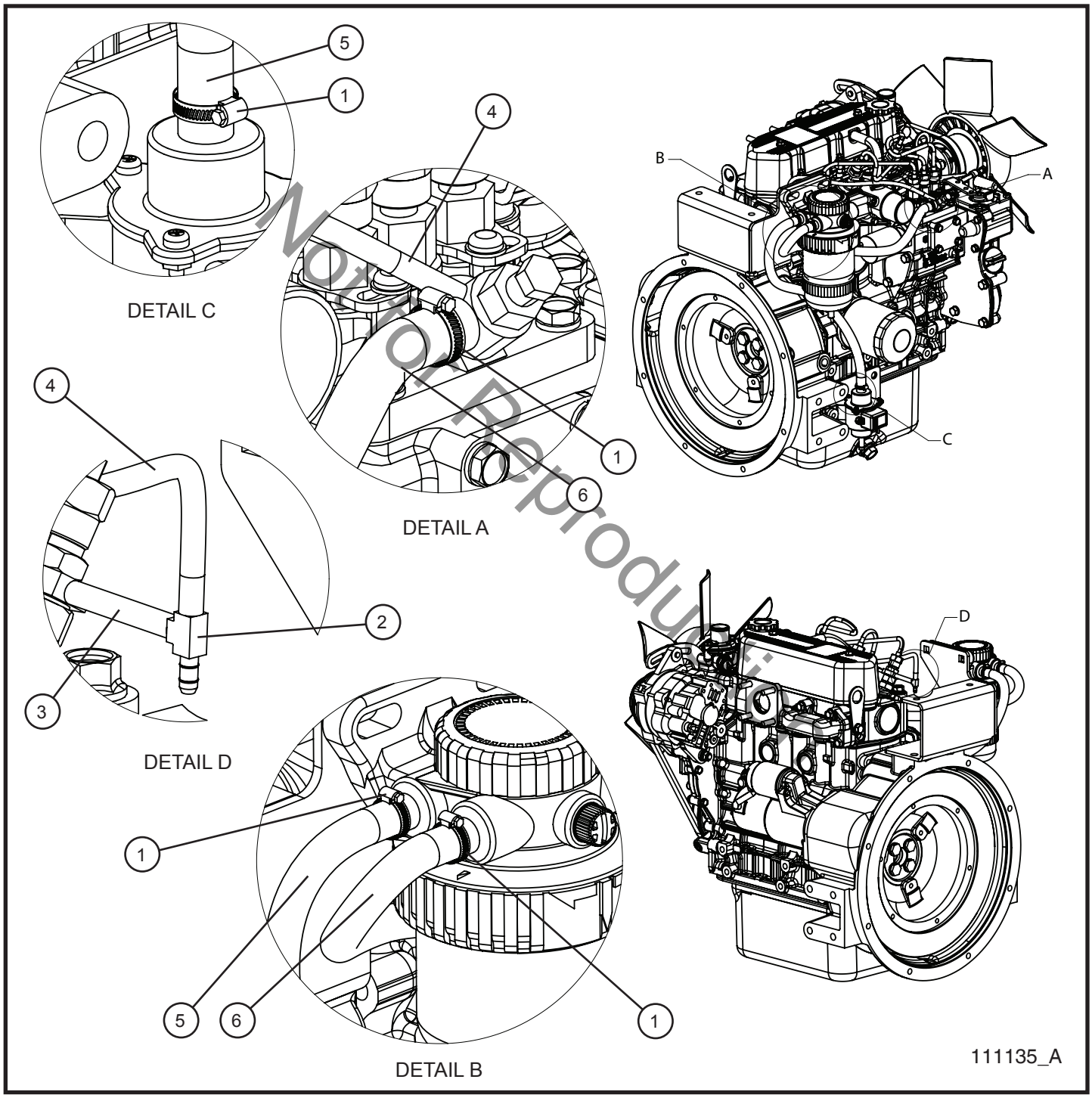

Not for Reproduction

©2017 Allmand™ Bros., Inc.

6.5 - Mitsubishi Engine Assembly Group (4 of 4)

SN 39-000001 and UP

Item	Part No.	Part Description	Qty.
1	433400	#4 HOSE CLAMP	4
2	108713	TEE FITTING FOR .25in. OD TUBE	1
3	081005	HOSE 1/4 OD x .035 WALL 250WP FUEL LINE BK x 1.5	1
4	081005	HOSE 1/4 OD x .035 WALL 250WP FUEL LINE BK x 11.0	1
5	081018	HOSE 5/16 BLACK FUEL LINE x 18.0	1
6	081018	HOSE 5/16 BLACK FUEL LINE x 18.0	1

Not for Reproduction

©2017 Allmand™ Bros., Inc.

6.6 - Mitsubishi Oil Line

SN 39-000001 and UP

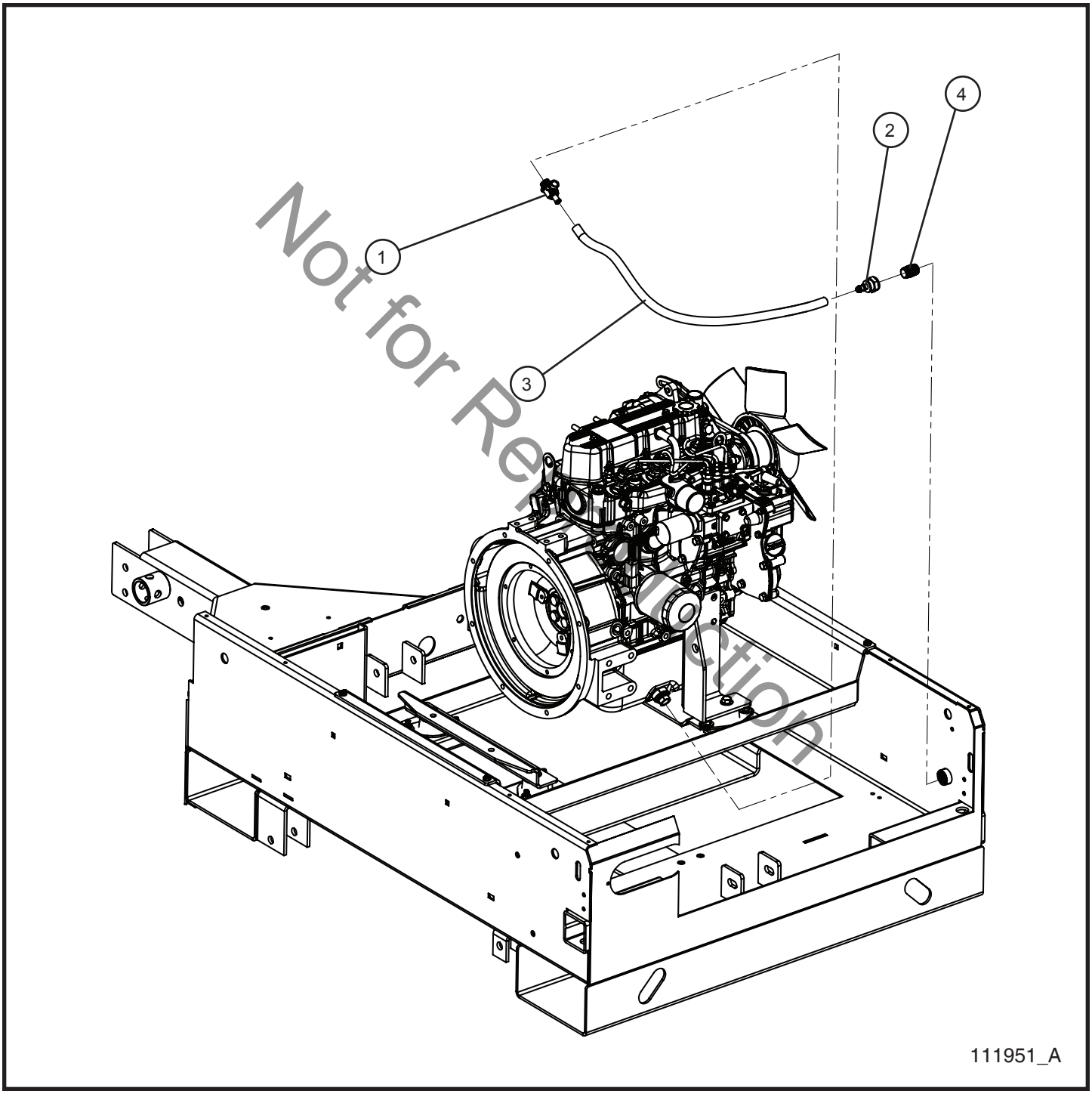

Not for Reproduction

©2017 Allmand™ Bros., Inc.

6.6 - Mitsubishi Oil Line

SN 39-000001 and UP

Item	Part No.	Part Description	Qty.
1	100901	DRAIN VALVE M18 x 1.5 - 3/8 HOSE	1
2	104865	3/8 HOSE x 1/2 NPT BARBED TO FEMALE	1
3	081017	HOSE 3/8 YELLOW LINE x 26.0	1
4	610215	1/2 NPT NIPPLE	1

Not for Reproduction

©2017 Allmand™ Bros., Inc.

6.7 - Ground Strap

SN 39-000001 and UP

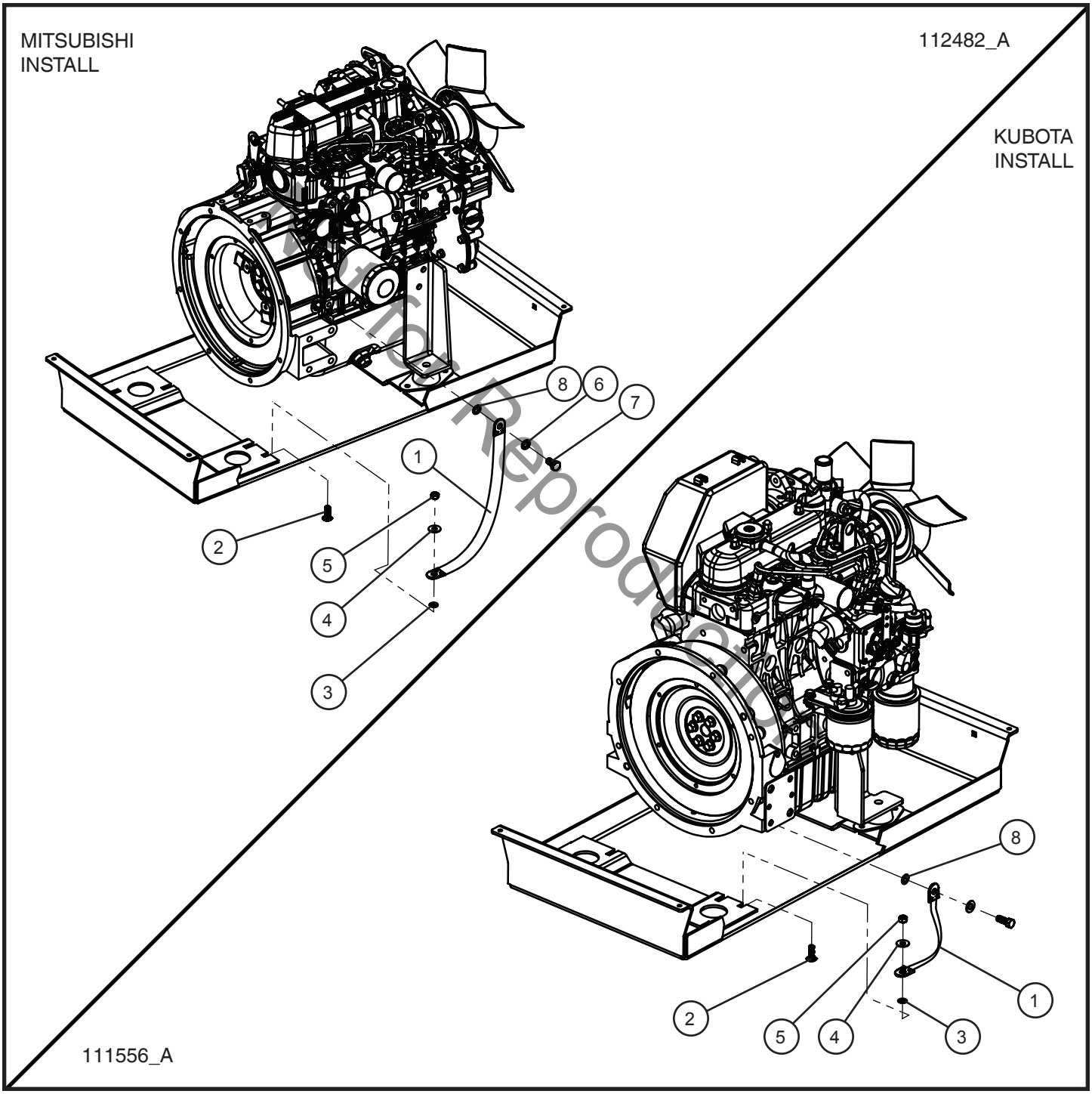

Not for Reproduction

©2017 Allmand™ Bros., Inc.

6.7 - Ground Strap

SN 39-000001 and UP

Item	Part No.	Part Description	Qty.
1	340105	GROUND STRAP	1
2	053020	5/16-18 x 1 CARRIAGE BOLT PL	1
3	043060	5/16 INTL TOOTH LOCK WASHER	1
4	047010	5/16 FLAT WASHER PL	1
5	044033	5/16-18 NYLOCK HEX NUT PL	1
6	042151	M10 SPLIT LOCK WASHER	1
7	042038	M10 x 20mm x 1.25mm HEX HEAD CS GR8.8 PL	1
8	043070	3/8 INTL TOOTH LOCK WASHER PL	2

Not for Reproduction

©2017 Allmand™ Bros., Inc.

6.8 - Battery Install Group

SN 39-000001 and UP

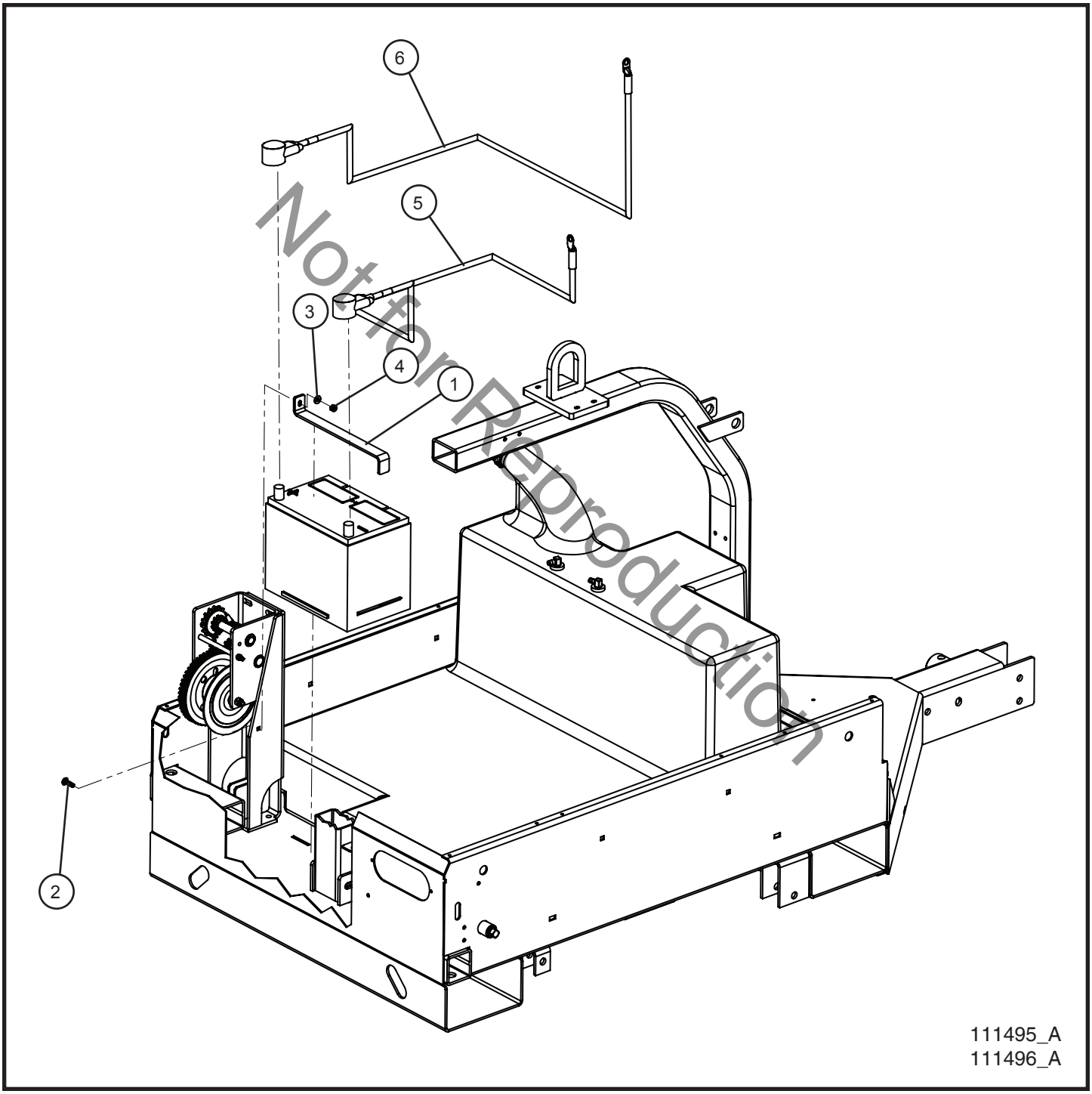

Not for Reproduction

©2017 Allmand™ Bros., Inc.

6.8 - Battery Install Group

SN 39-000001 and UP

Item	Part No.	Part Description	Qty.
1	111503P	BATTERY HOLDDOWN STRAP	1
2	100342	1/4-20 x 1 CARRIAGE BOLT PL	1
3	047005	1/4 FLAT WASHER PL	1
4	044023	1/4-20 NYLOCK HEX NUT PL	1
5	713098	BATTERY CABLE BLACK 2GA 36” (NEGATIVE)	1
6	027026	BATTERY CABLE RED 2GA 48” (POSITIVE)	1

Not for Reproduction

©2017 Allmand™ Bros., Inc.

6.9 - Fuel Tank

SN 39-000001 and UP

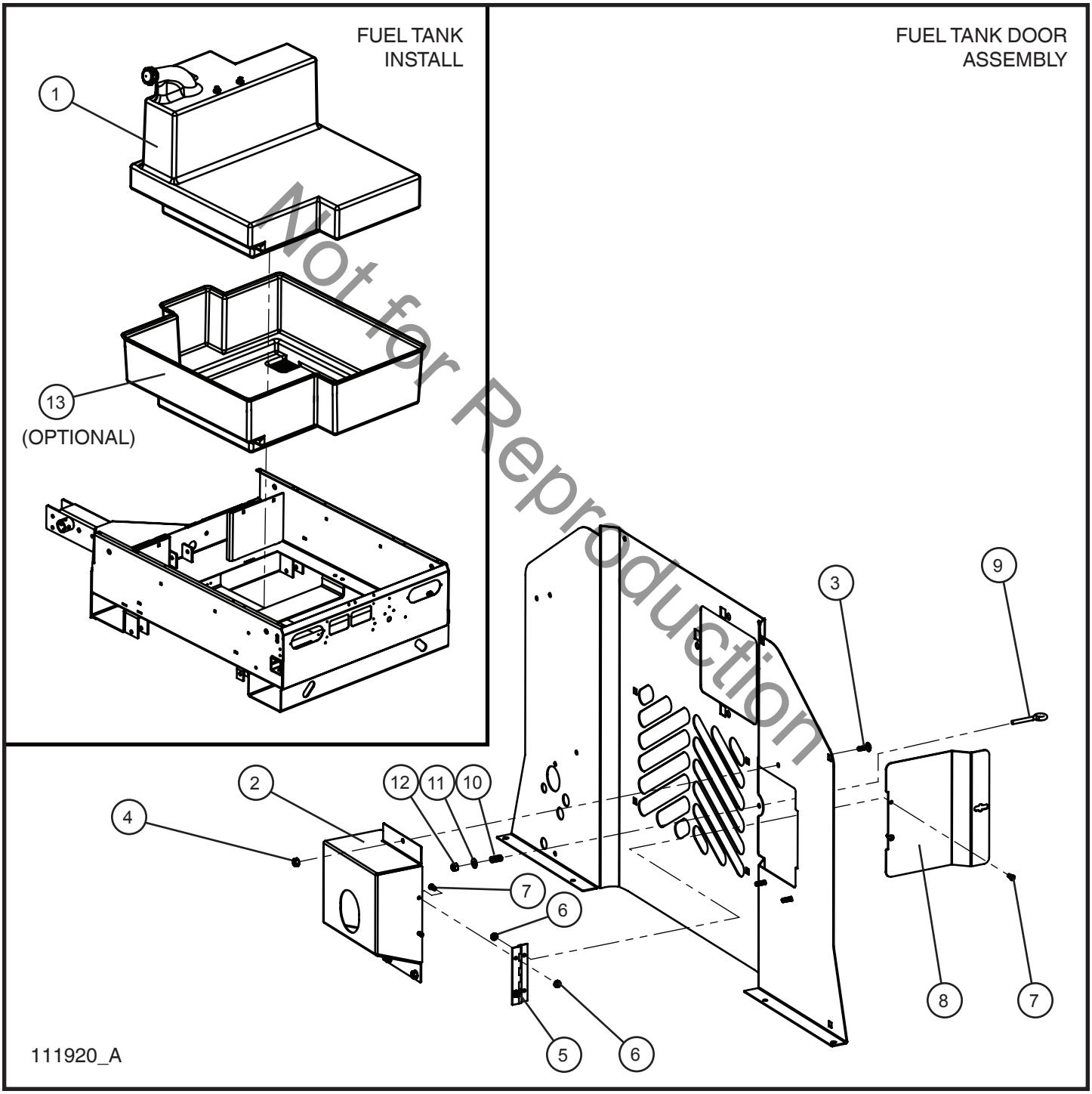

Not for Reproduction

©2017 Allmand™ Bros., Inc.

6.9 - Fuel Tank

SN 39-000001 and UP

Item	Part No.	Part Description	Qty.
1	108921	TANK POLY 45 GALLON	1
2	109856	FUEL TANK SHELL	1
3	041050	1/4-20 x 3/4 PH-TRUSS HEAD MACHINE SCREW	3
4	044021	1/4-20 KEPS HEX NUT PL	3
5	045023	HINGE APF & ALT BOARDS	1
6	044016	#10-24 KEPS HEX NUT PL	4
7	041021	#10-24 x 1/2 PH-ROUND HEAD MS PL	4
8	109872	PANEL ACCESS FUEL FILL	1
9	045066	BOLT EYE 1/4-20 x 1 ZINC	1
10	106528	SPRING COMPRESSION 3/8 x 3/4	1
11	047009	1/4 FLAT WASHER SAE SS	1
12	044023	1/4-20 NYLOCK HEX NUT PL	1
13	108924	FUEL TANK LINER	1

Not for Reproduction

©2017 Allmand™ Bros., Inc.

6.10 - Fuel Sender

SN 39-000001 and UP

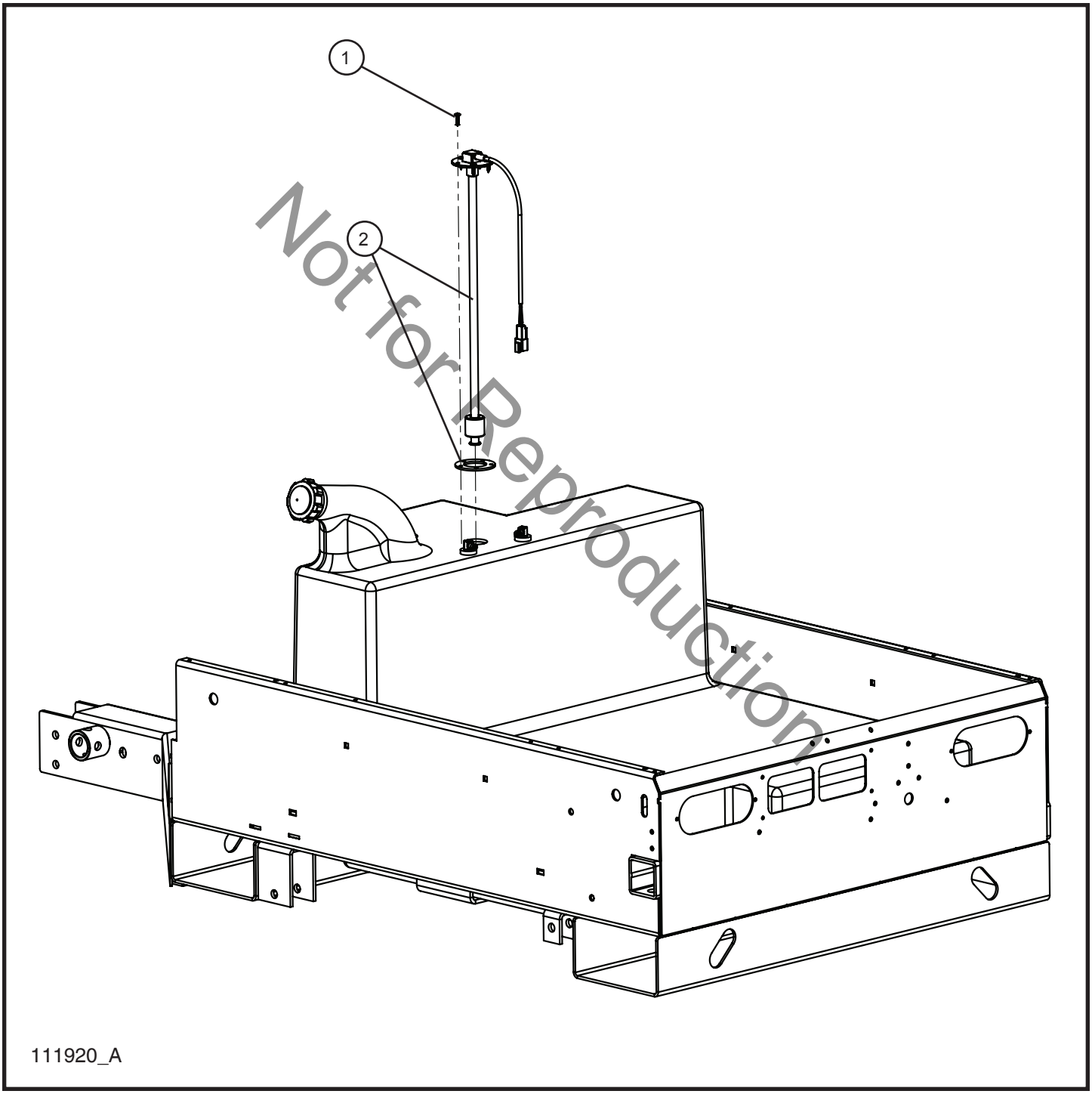

Not for Reproduction

©2017 Allmand™ Bros., Inc.

6.10 - Fuel Sender

SN 39-000001 and UP

Item	Part No.	Part Description	Qty.
1	102556	#8 x 3/4 SCREW	5
2	112641	VERTICAL SHAFT FUEL LEVEL SENDER	1
NS	110090	FUEL LEVEL SENDER HARNESS	1

*NS - NOT SHOWN

Not for Reproduction

©2017 Allmand™ Bros., Inc.

6.11 - Kubota Fuel Lines

SN 39-000001 and UP

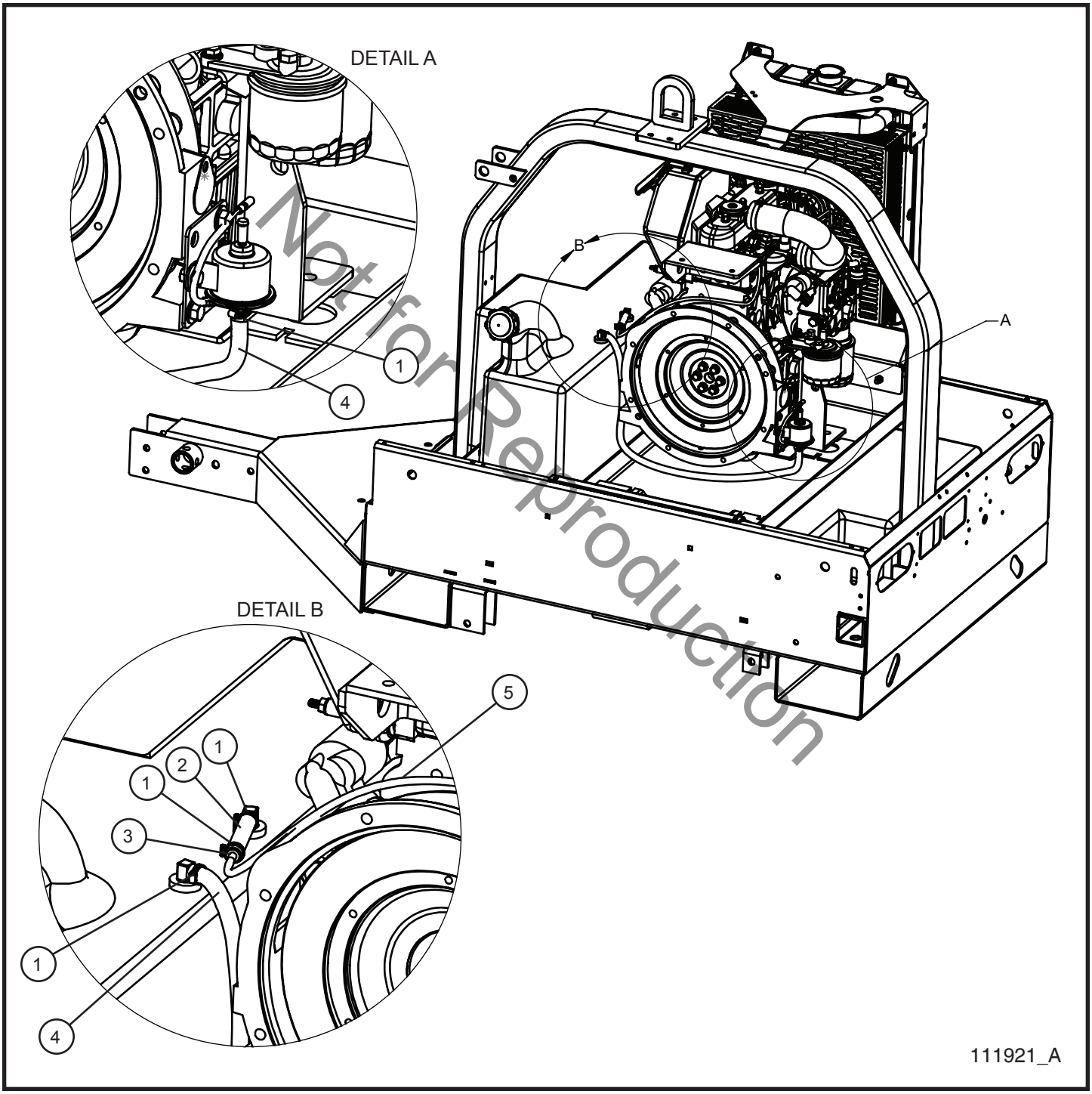

Not for Reproduction

©2017 Allmand™ Bros., Inc.

6.11 - Kubota Fuel Lines

SN 39-000001 and UP

Item	Part No.	Part Description	Qty.
1	433400	#4 HOSE CLAMP	4
2	081018	HOSE 5/16” FUEL LINE x 3.0	1
3	106134	REDUCER FITTING HOSE BARB	1
4	081018	HOSE 5/16” FUEL LINE x 30.0	1
5	081005	NYLON HOSE 1/4 OD x .035 WALL 250WP FUEL LINE BK	1

Not for Reproduction

©2017 Allmand™ Bros., Inc.

6.12 - Mitsubishi Fuel Lines

SN 39-000001 and UP

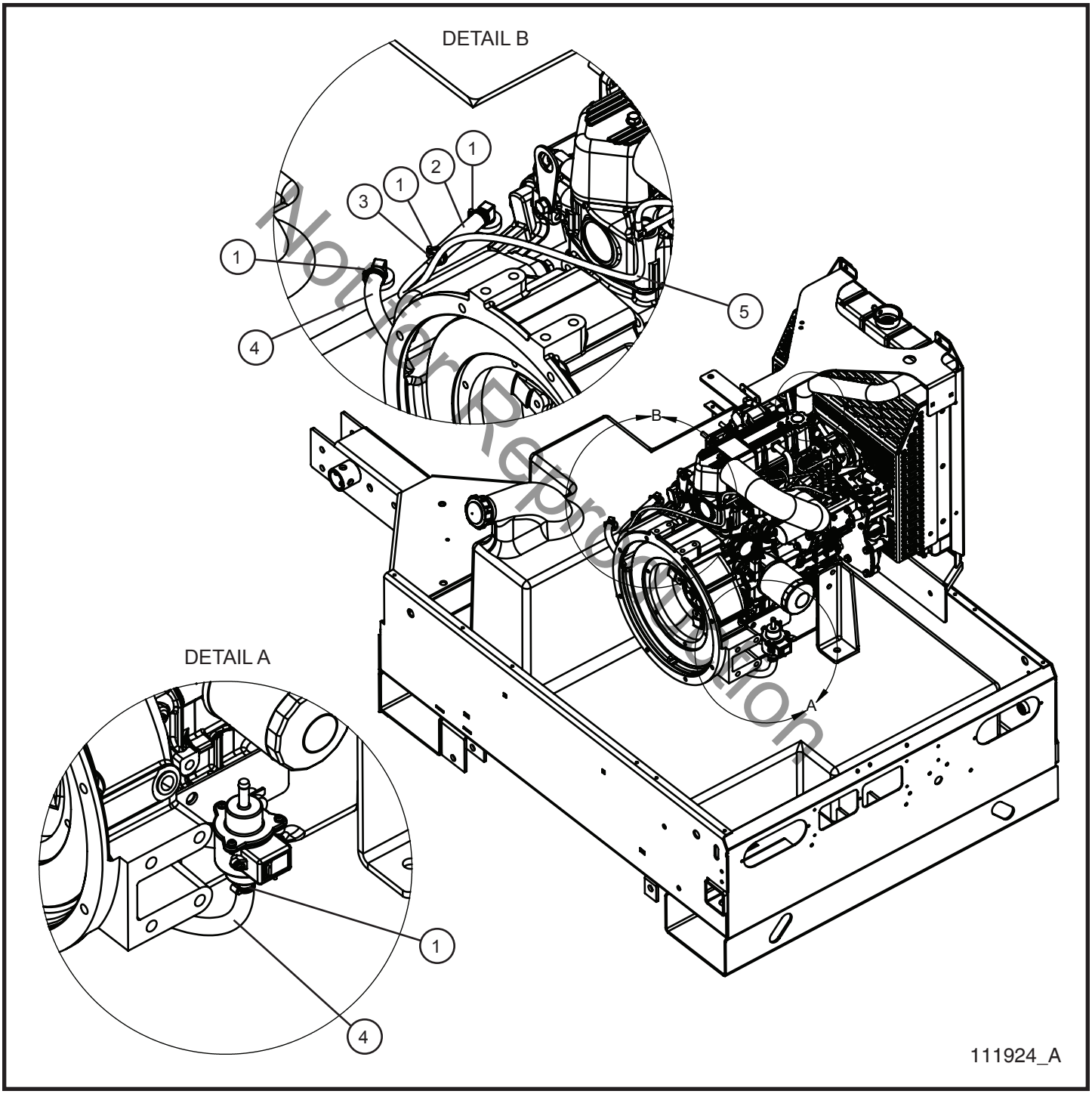

Not for Reproduction

©2017 Allmand™ Bros., Inc.

6.12 - Mitsubishi Fuel Lines

SN 39-000001 and UP

Item	Part No.	Part Description	Qty.
1	433400	#4 HOSE CLAMP	4
2	081018	HOSE 5/16” FUEL LINE x 3.0	1
3	106134	REDUCER FITTING HOSE BARB	1
4	081018	HOSE 5/16” FUEL LINE x 30.0	1
5	081005	NYLON HOSE 1/4 OD x .035 WALL 250WP FUEL LINE BK	1

Not for Reproduction

©2017 Allmand™ Bros., Inc.

7.1 - Coliseum 6/8kW 50/60Hz Generator

SN 39-000001 and UP

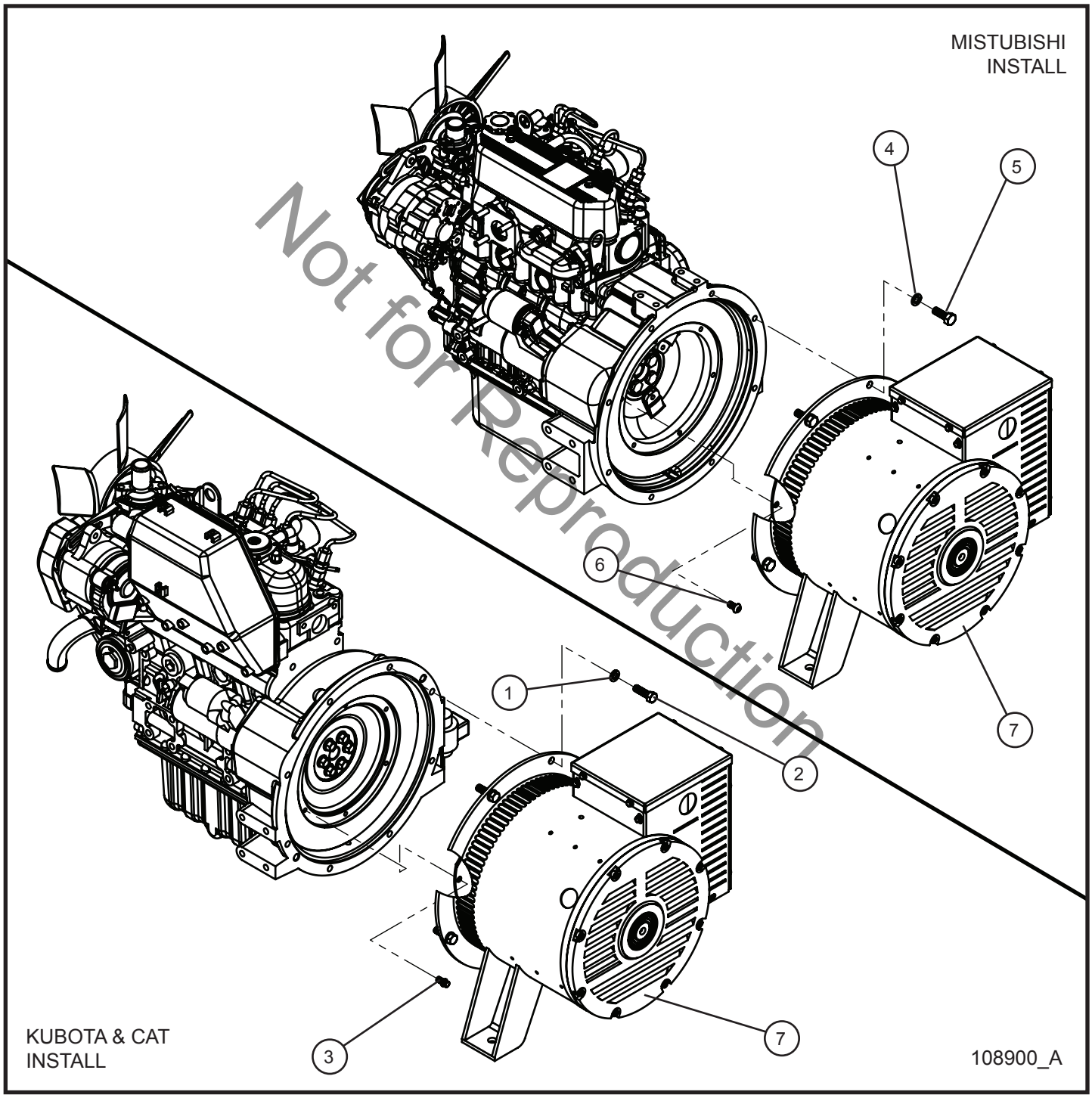

Not for Reproduction

©2017 Allmand™ Bros., Inc.

7.1 - Coliseum 6/8kW 50/60Hz Generator

SN 39-000001 and UP

Item	Part No.	Part Description	Qty.
1	043065	3/8 SPLITLOCK WASHER PL	10
2	046115	3/8-16 x 1 1/4 HEX HEAD CS GR5 PL	8
3	046041	5/16-18 x 1/2 PT FLANGE HEAD BOLT	6
4	042151	M10 SPLITLOCK WASHER PL	8
5	042041	10mm x 1.25mm x 30mm HEX HEAD	8
6	042028	M8 x 1.25mm x 16mm SOCKET BUTTON HEAD CS	8
7	108858	GENERATOR 50/60Hz COLISEUM 6/8kW	1
NS	108892	CAPACITOR 65uf 630V	1

*NS - NOT SHOWN

Not for Reproduction

©2017 Allmand™ Bros., Inc.

7.2 - 6/4 Generator Cord Install Group

SN 39-000001 and UP

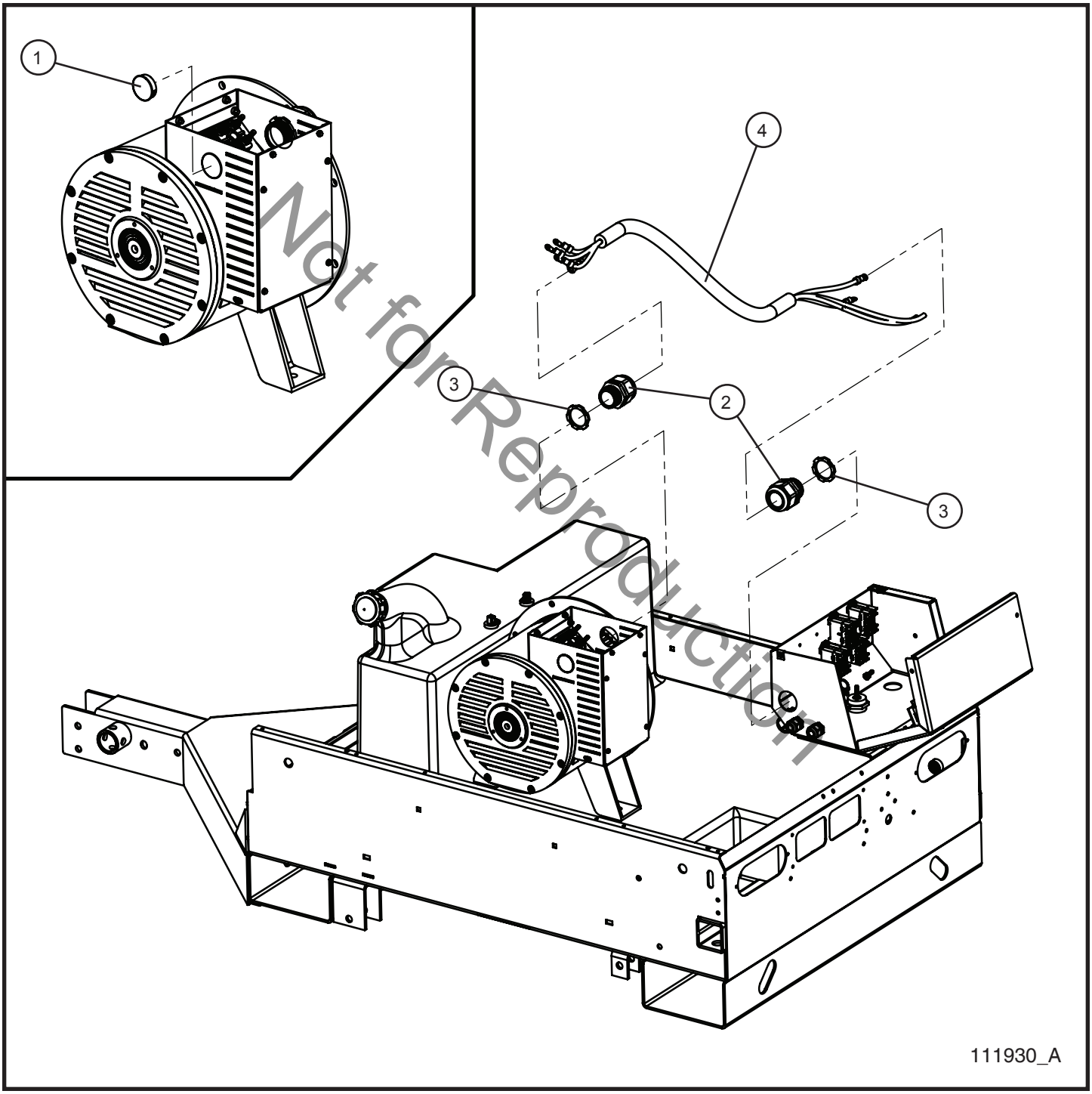

Not for Reproduction

©2017 Allmand™ Bros., Inc.

7.2 - 6/4 Generator Cord Install Group

SN 39-000001 and UP

Item	Part No.	Part Description	Qty.
1	108911	LOCKING DOME PLUG 1.375	1
2	105628	CORD GRIP 1 1/4 NYLON BLACK	2
3	350363	1 1/4 CORD GRIP NUT	2
4	111929	GENERATOR CORD 6/4	1
NS	107480	AC SCHEMATIC GEN SIDE 6/4 CORD	1

Not for Reproduction

©2017 Allmand™ Bros., Inc.

8.1 - Left Side Decals

SN 39-000001 and UP

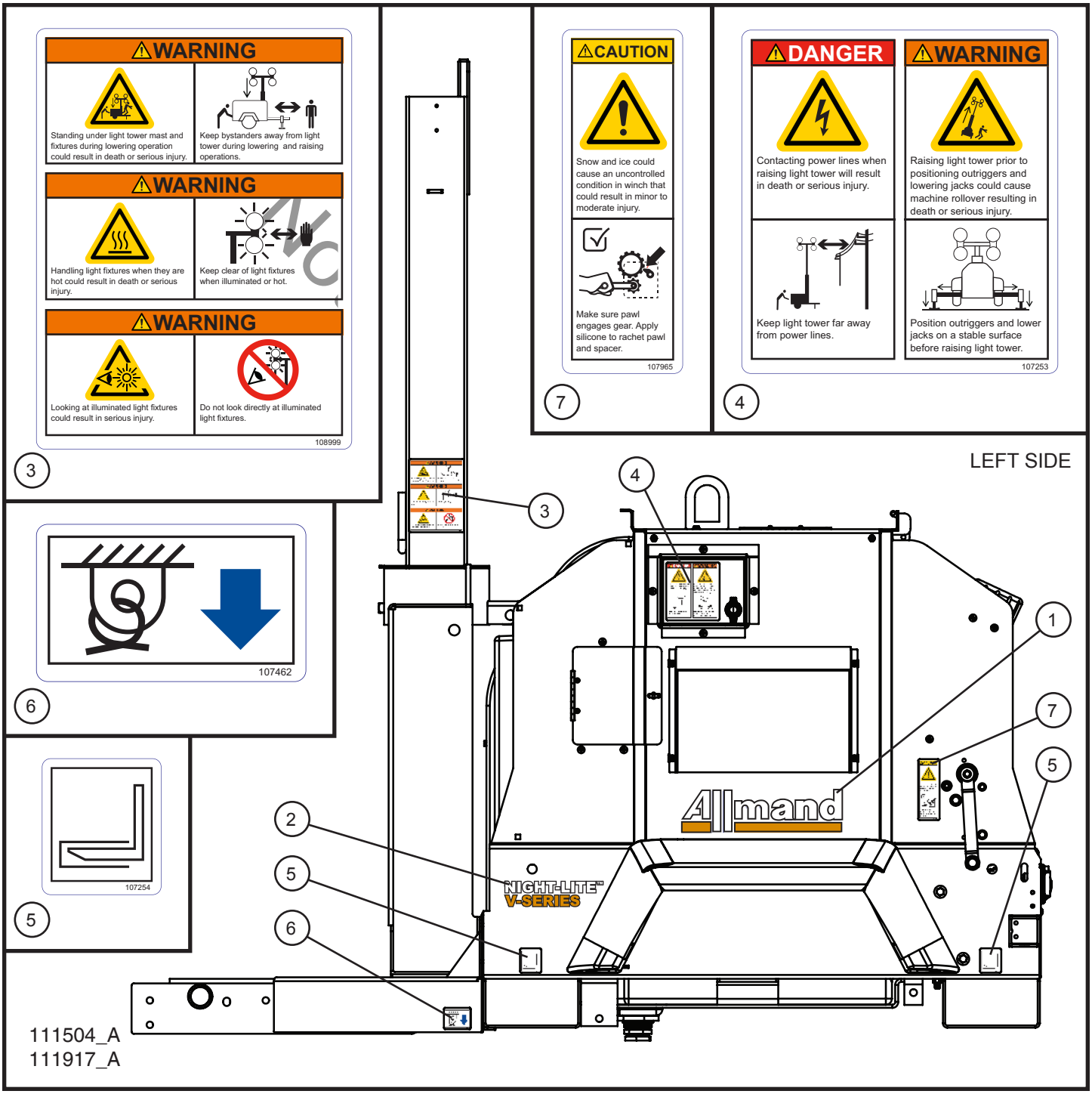

©2017 Allmand™ Bros., Inc.

8.1 - Left Side Decals

SN 39-000001 and UP

Item	Part No.	Part Description	Qty.
1	112134	ALLMAND WHITE GOLD STRIPE DECAL	1
2	112233	NIGHT-LITE V-SERIES LEFT DECAL	1
3	108999	VERTICAL TOWER 3 PANEL WARNING DECAL	1
4	107253	POWER LINE DANGER AND OUTRIGGERS WARNING DECAL	1
5	107254	FORKLIFT DECAL	2
6	107462	TIE DOWN POSITION DECAL	1
7	107965	WINCH CAUTION DECAL	1

Not for Reproduction

©2017 Allmand™ Bros., Inc.

8.2 - Left Side Door Panels and Back Side Decals

SN 39-000001 and UP

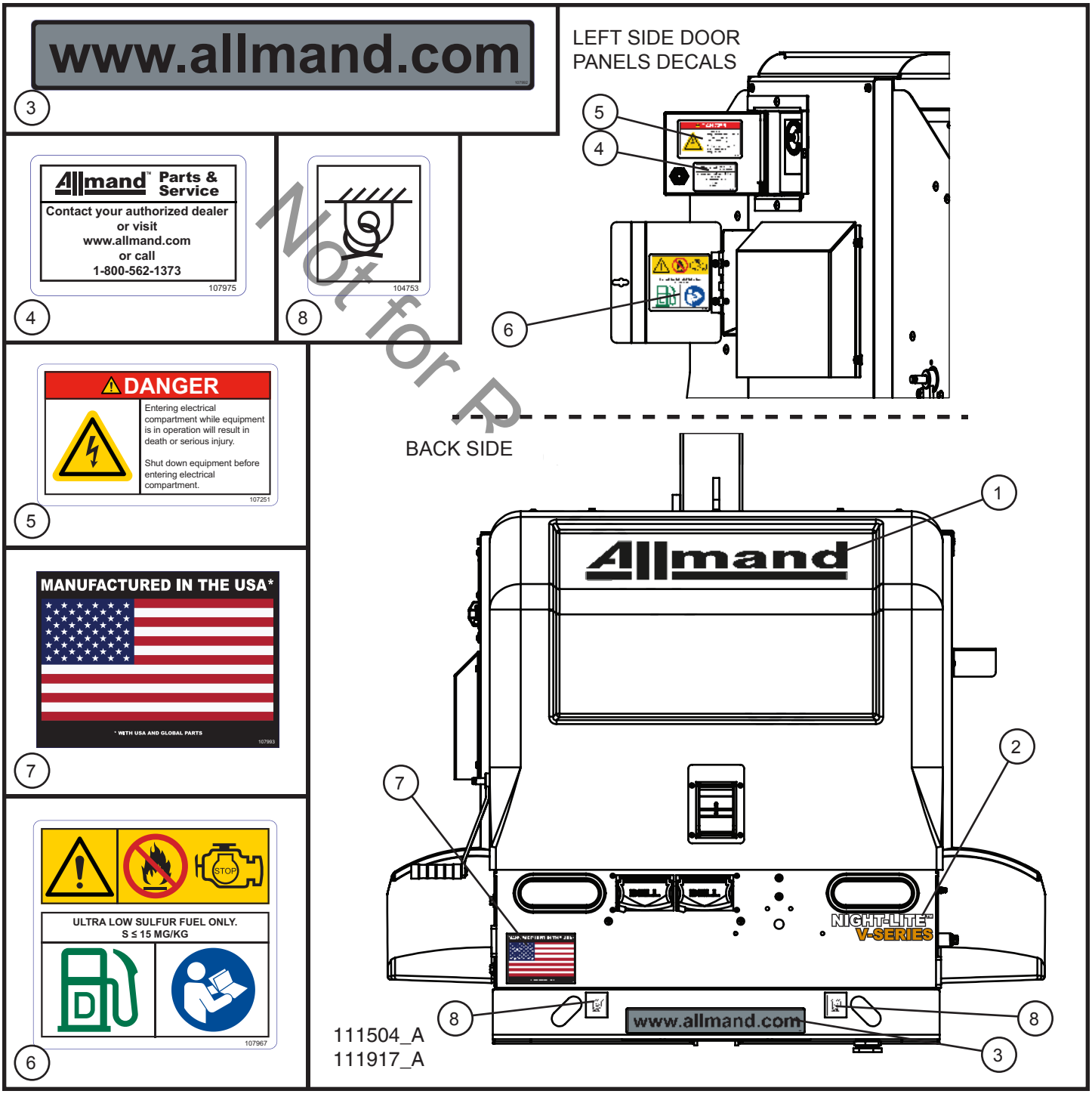

©2017 Allmand™ Bros., Inc.

8.2 - Left Side Door Panels and Back Side Decals

SN 39-000001 and UP

Item	Part No.	Part Description	Qty.
1	112232	ALLMAND BLACK 21 INCH DECAL	1
2	112234	NIGHT-LITE V-SERIES RIGHT DECAL	1
3	107992	WWW.ALLMAND.COM DECAL	1
4	107975	PARTS & SERVICE DECAL	1
5	107251	HAZARDOUS VOLTAGE DANGER DECAL	1
6	107967	LOW SULFUR FUEL DECAL	1
7	107993	MANUFACTURED IN THE USA DECAL	1
8	104753	TIE DOWN POINT DECAL	2

Not for Reproduction

©2017 Allmand™ Bros., Inc.

8.3 - Right Side Decals

SN 39-000001 and UP

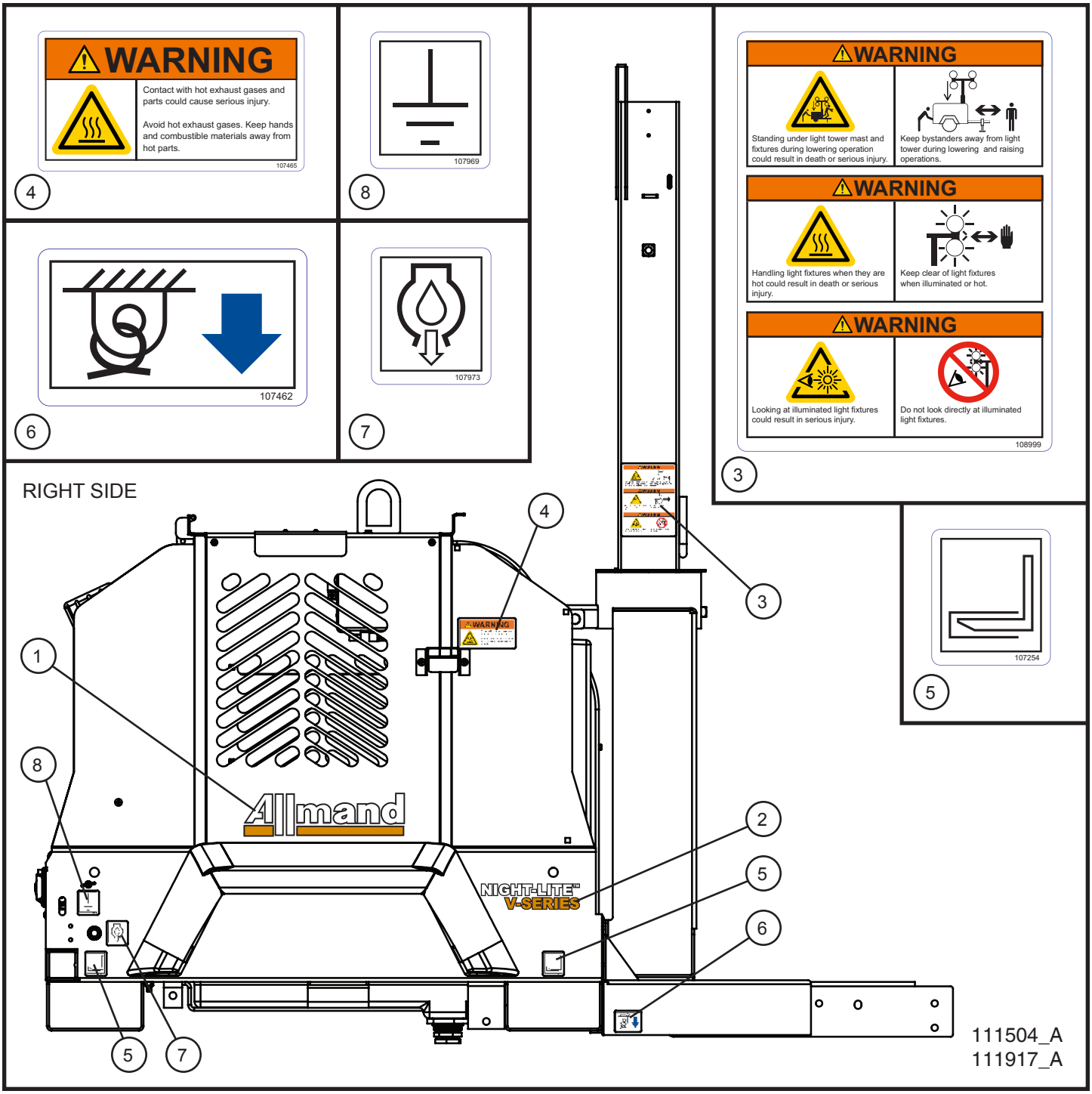

©2017 Allmand™ Bros., Inc.

8.3 - Right Side Decals

SN 39-000001 and UP

Item	Part No.	Part Description	Qty.
1	112134	ALLMAND WHITE GOLD STRIPE DECAL	1
2	112234	NIGHT-LITE V-SERIES RIGHT DECAL	1
3	108999	VERTICAL TOWER 3 PANEL WARNING DECAL	1
4	107465	HOT SURFACE WARNING DECAL	1
5	107254	FORKLIFT DECAL	2
6	107462	TIE DOWN POSITION DECAL	1
7	107973	OIL DRAIN DECAL	1
8	107969	GROUND DECAL	1

Not for Reproduction

©2017 Allmand™ Bros., Inc.

8.4 - Front Side Decals

SN 39-000001 and UP

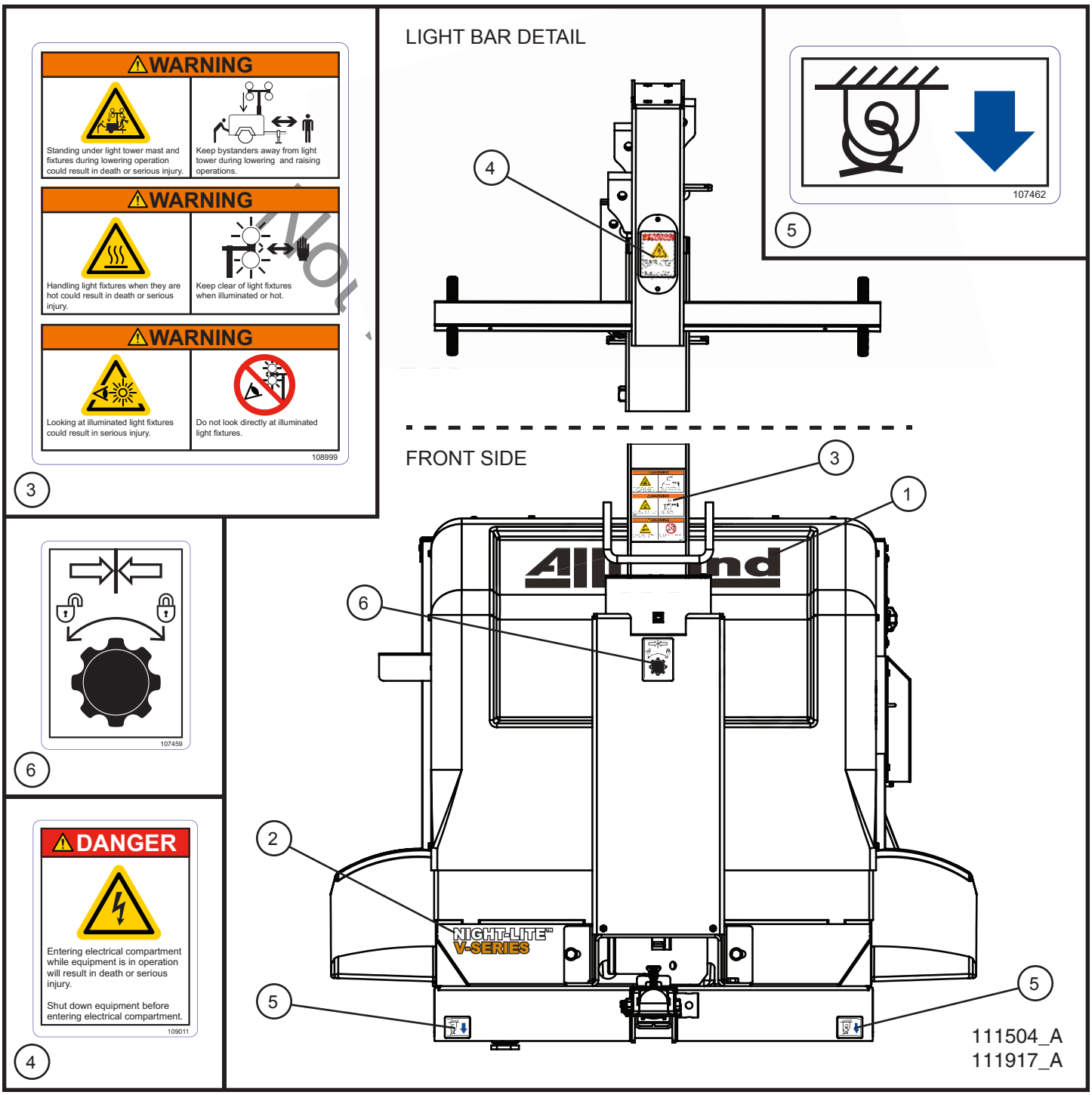

©2017 Allmand™ Bros., Inc.

8.4 - Front Side Decals

SN 39-000001 and UP

Item	Part No.	Part Description	Qty.
1	112232	ALLMAND BLACK 21 INCH DECAL	1
2	112233	NIGHT-LITE V-SERIES LEFT DECAL	1
3	108999	VERTICAL TOWER 3 PANEL WARNING DECAL	1
4	109011	HAZARDOUS VOLTAGE VERTICAL DANGER DECAL	1
5	107462	TIE DOWN POSITION DECAL	2
6	107459	TOWER ALIGNMENT DECAL	1

Not for Reproduction

©2017 Allmand™ Bros., Inc.

8.5 - Top Side Decals

SN 39-000001 and UP

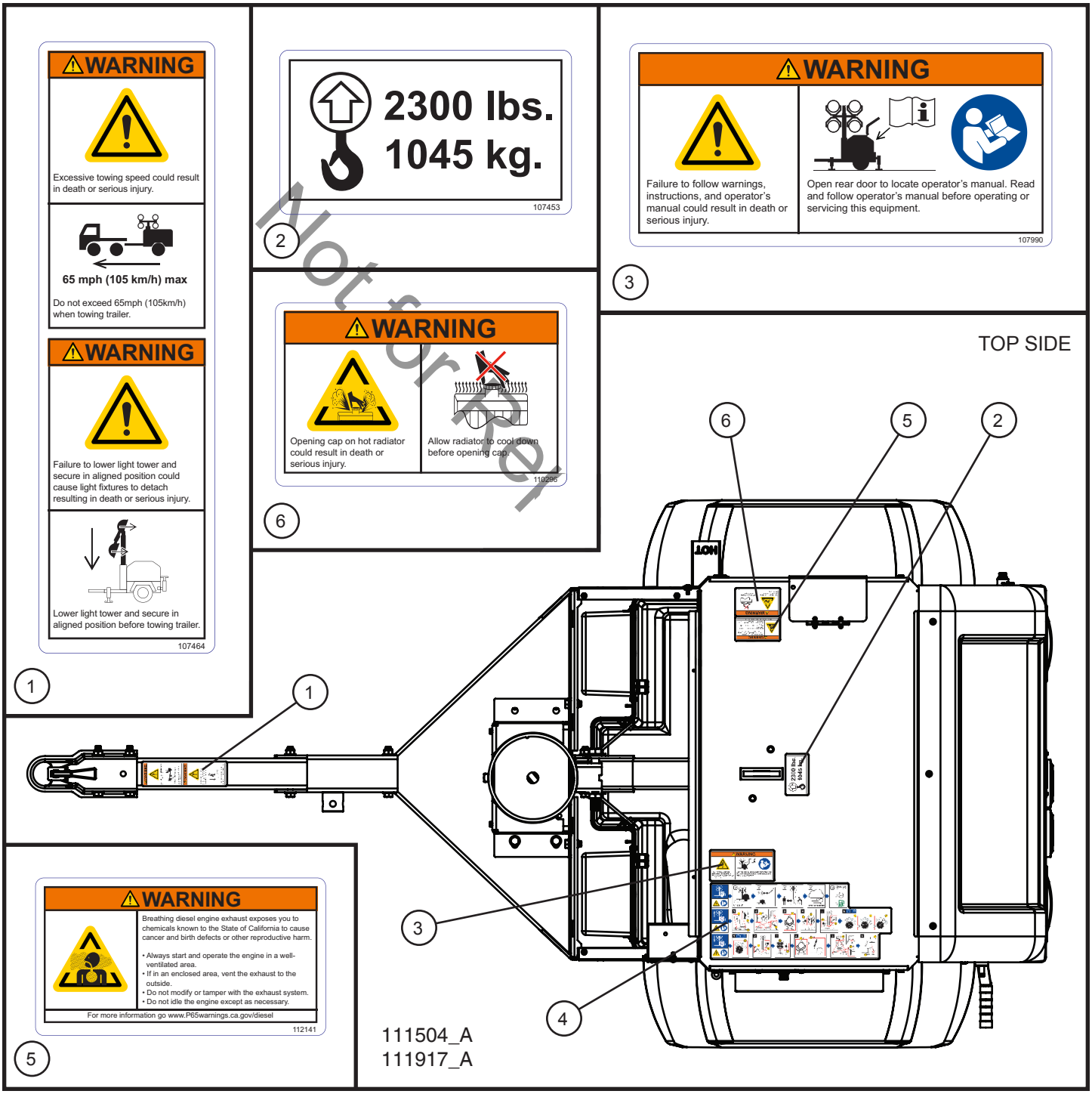

©2017 Allmand™ Bros., Inc.

8.5 - Top Side Decals

SN 39-000001 and UP

Item	Part No.	Part Description	Qty.
1	107464	EXCESSIVE TOWING DECAL	1
2	107453	LIFT HOOK WEIGHT DECAL	1
3	107990	OPERATOR WARNING DECAL	1
4	110303	MANUAL WINCH TOWER INSTRUCTIONS DECAL	1
	110304	ELECTRIC WINCH TOWER INSTRUCTIONS DECAL	1
	107256	LSC MANUAL WINCH TOWER INSTRUCTIONS DECAL	1
	107519	LSC ELECTRIC WINCH TOWER INSTRUCTIONS DECAL	1
5	112141	PROPOSITION 65 WARNING DECAL	1
6	110296	RADIATOR WARNING DECAL	1

Not for Reproduction

©2017 Allmand™ Bros., Inc.

8.6 - Interior Decals

SN 39-000001 and UP

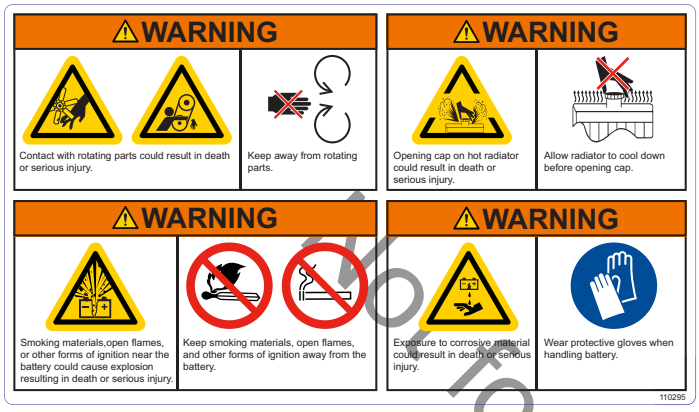

1

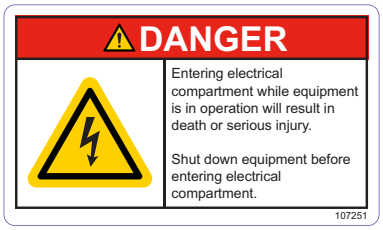

2

BREAKER BOX DETAIL

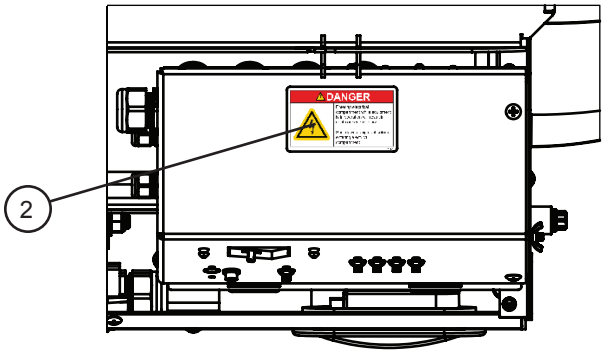

REAR DOOR INTERIOR DETAIL

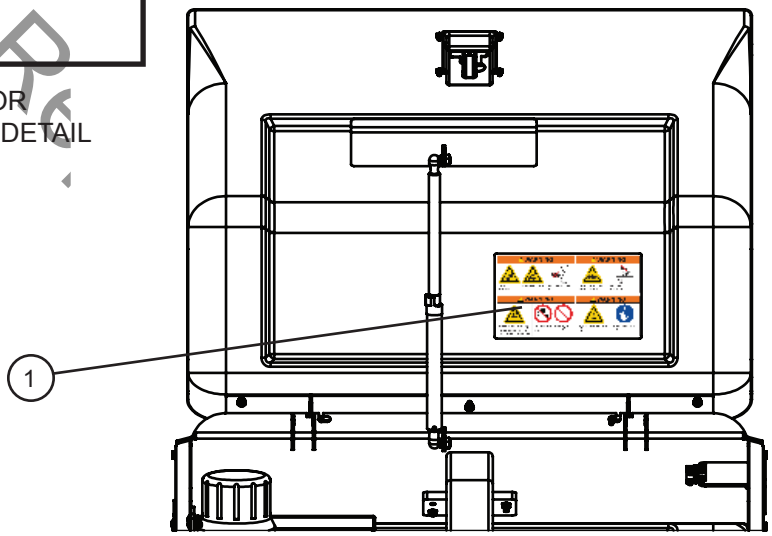

BALLAST BOXES DETAIL

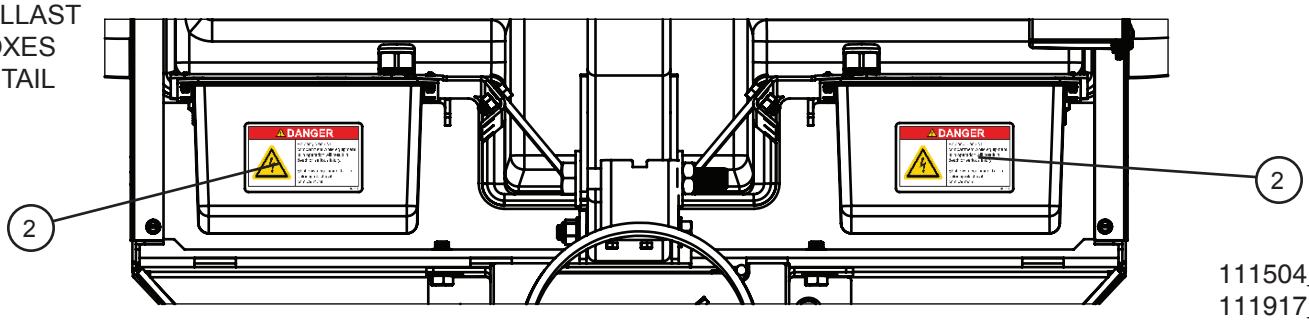

111504_A
111917_A

Not for Re

©2017 Allmand™ Bros., Inc.

8.6 - Interior Decals

SN 39-000001 and UP

Item	Part No.	Part Description	Qty.
1	110295	ENGINE-RADIATOR-BATTERY WARNING DECAL	1
2	107251	HAZARDOUS VOLTAGE DANGER DECAL	3

Not for Reproduction

©2017 Allmand™ Bros., Inc.

8.7 - Wordless Left Side Decals

SN 39-000001 and UP

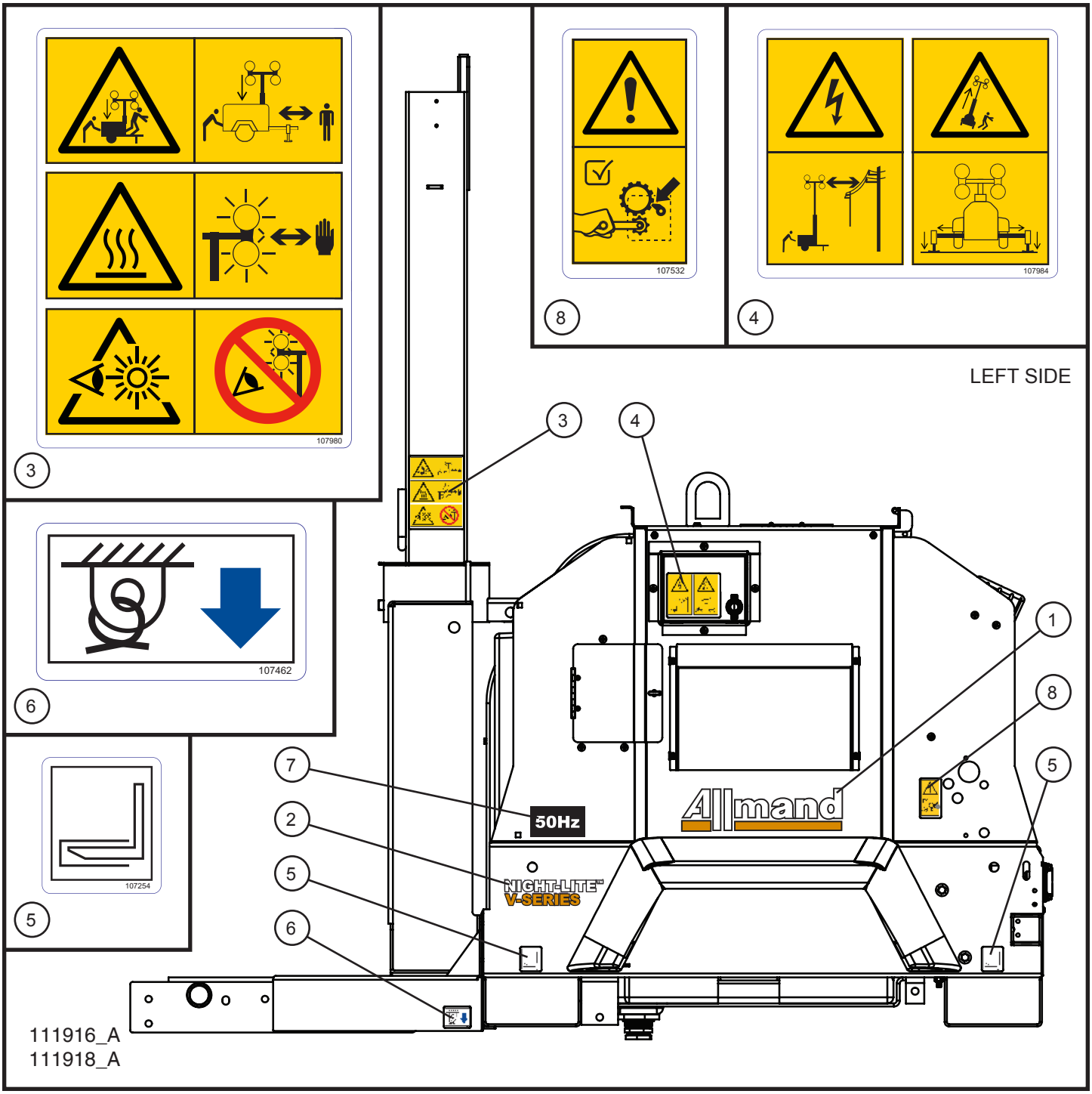

©2017 Allmand™ Bros., Inc.

8.7 - Wordless Left Side Decals

SN 39-000001 and UP

Item	Part No.	Part Description	Qty.
1	112134	ALLMAND WHITE GOLD STRIPE DECAL	1
2	112233	NIGHT-LITE V-SERIES LEFT DECAL	1
3	107980	WORDLESS VERTICAL TOWER 3 PANEL WARNING DECAL	1
4	107984	WORDLESS POWER DANGER/OUTRIGGERS WARNING DECAL	1
5	107254	FORKLIFT DECAL	2
6	107462	TIE DOWN POSITION DECAL	1
7	108354	50Hz DECAL	1
8	107532	WORDLESS WINCH CAUTION DECAL	1

Not for Reproduction

©2017 Allmand™ Bros., Inc.

8.8 - Wordless Left Side Door Panels and Back Side Decals

SN 39-000001 and UP

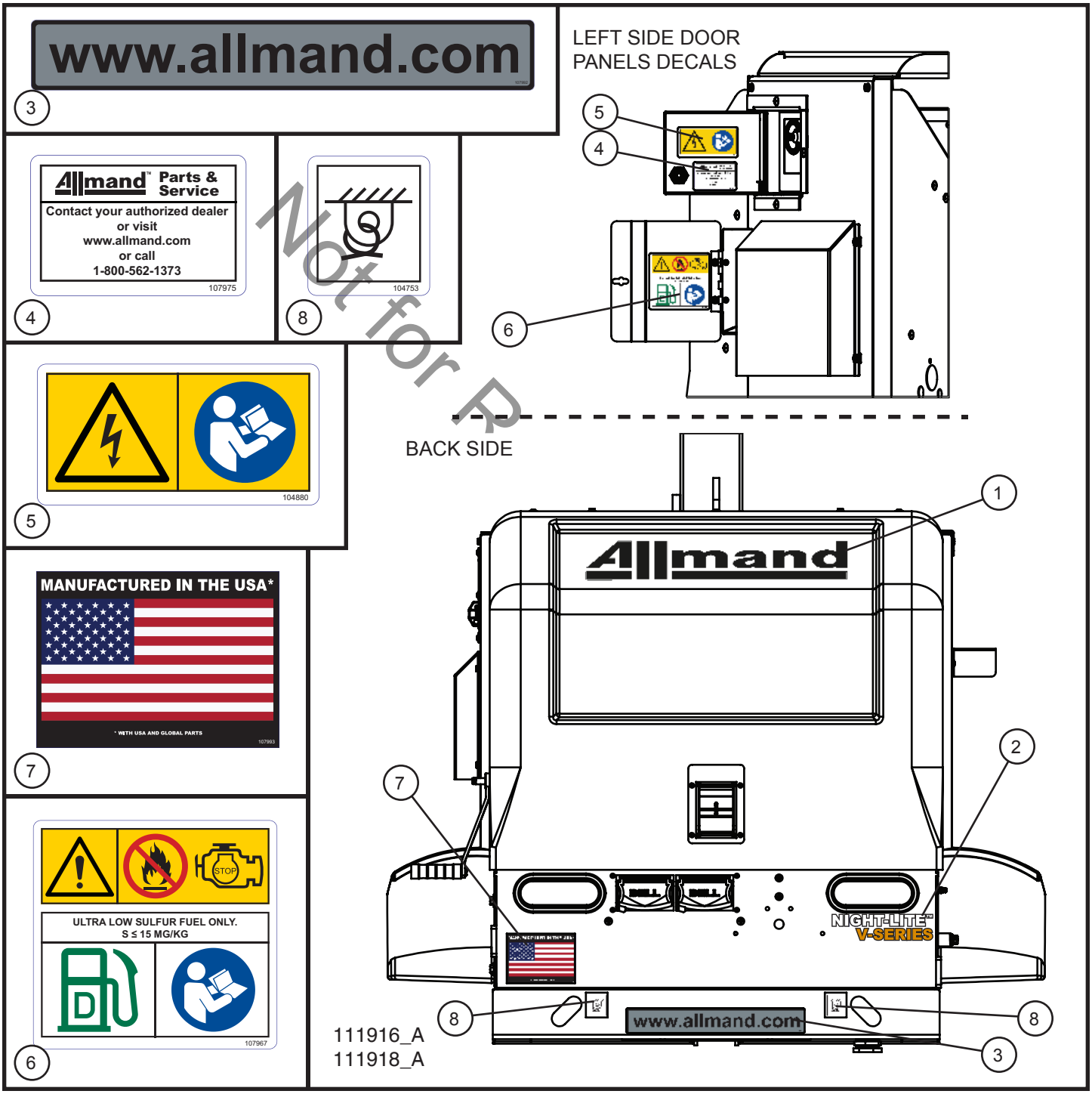

Not for R

©2017 Allmand™ Bros., Inc.

8.8 - Wordless Left Side Door Panels and Back Side Decals

SN 39-000001 and UP

Item	Part No.	Part Description	Qty.
1	112232	ALLMAND BLACK 21 INCH DECAL	1
2	112234	NIGHT-LITE V-SERIES RIGHT DECAL	1
3	107992	WWW.ALLMAND.COM DECAL	1
4	107975	PARTS & SERVICE DECAL	1
5	104880	WORDLESS HAZARDOUS VOLTAGE DANGER DECAL	1
6	107967	LOW SULFUR FUEL DECAL	1
7	107993	MANUFACTURED IN THE USA DECAL	1
8	104753	TIE DOWN POINT DECAL	2

Not for Reproduction

©2017 Allmand™ Bros., Inc.

8.9 - Wordless Right Side Decals

SN 39-000001 and UP

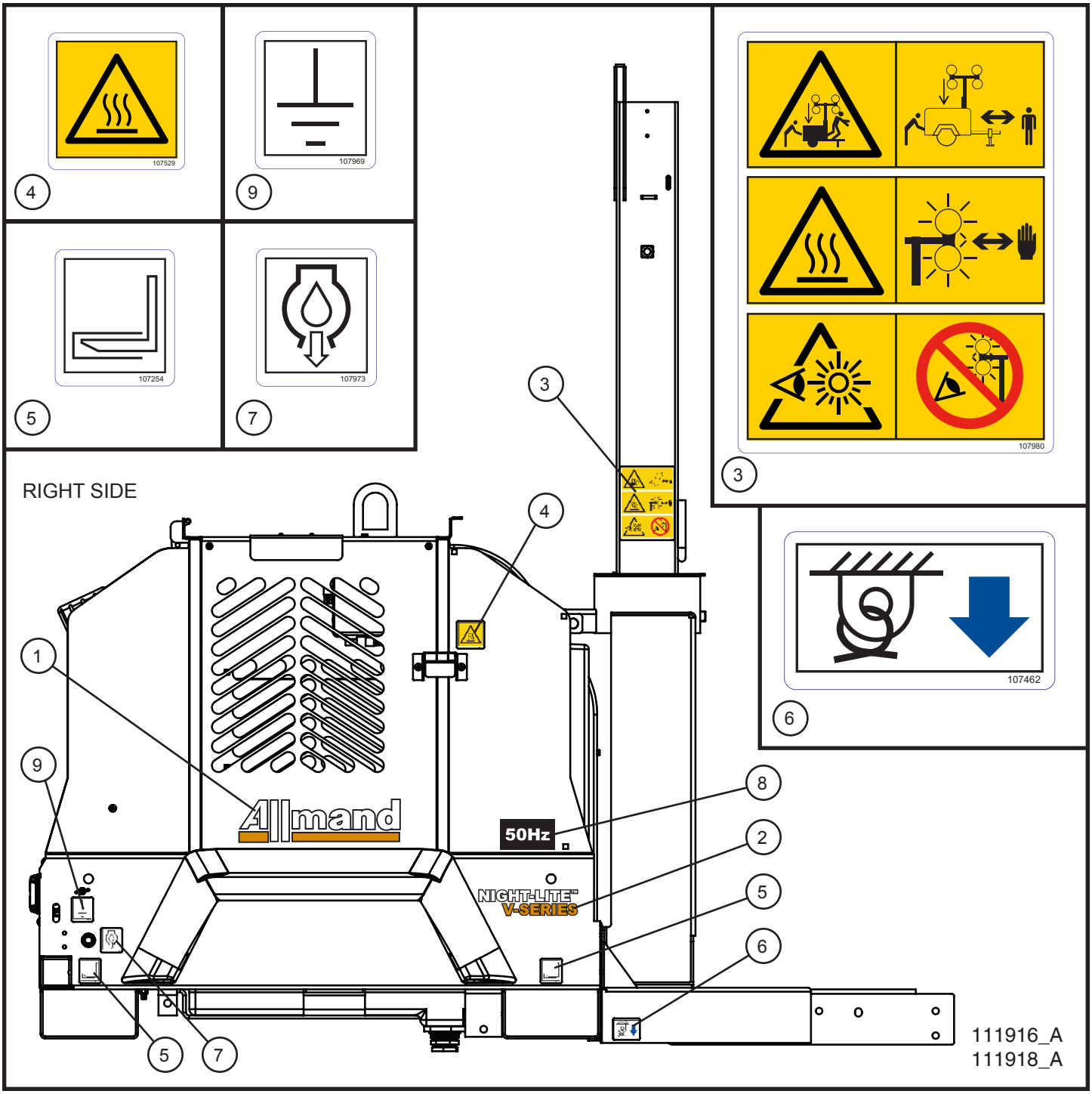

©2017 Allmand™ Bros., Inc.

8.9 - Wordless Right Side Decals

SN 39-000001 and UP

Item	Part No.	Part Description	Qty.
1	112134	ALLMAND WHITE GOLD STRIPE DECAL	1
2	112234	NIGHT-LITE V-SERIES RIGHT DECAL	1
3	107980	WORDLESS VERTICAL TOWER 3 PANEL WARNING DECAL	1
4	107529	WORDLESS HOT SURFACE WARNING DECAL	1
5	107254	FORKLIFT DECAL	2
6	107462	TIE DOWN POSITION DECAL	1
7	107973	OIL DRAIN DECAL	1
8	108354	50Hz DECAL	1
9	107969	GROUND DECAL	1

Not for Reproduction

©2017 Allmand™ Bros., Inc.

8.10 - Wordless Front Side Decals

SN 39-000001 and UP

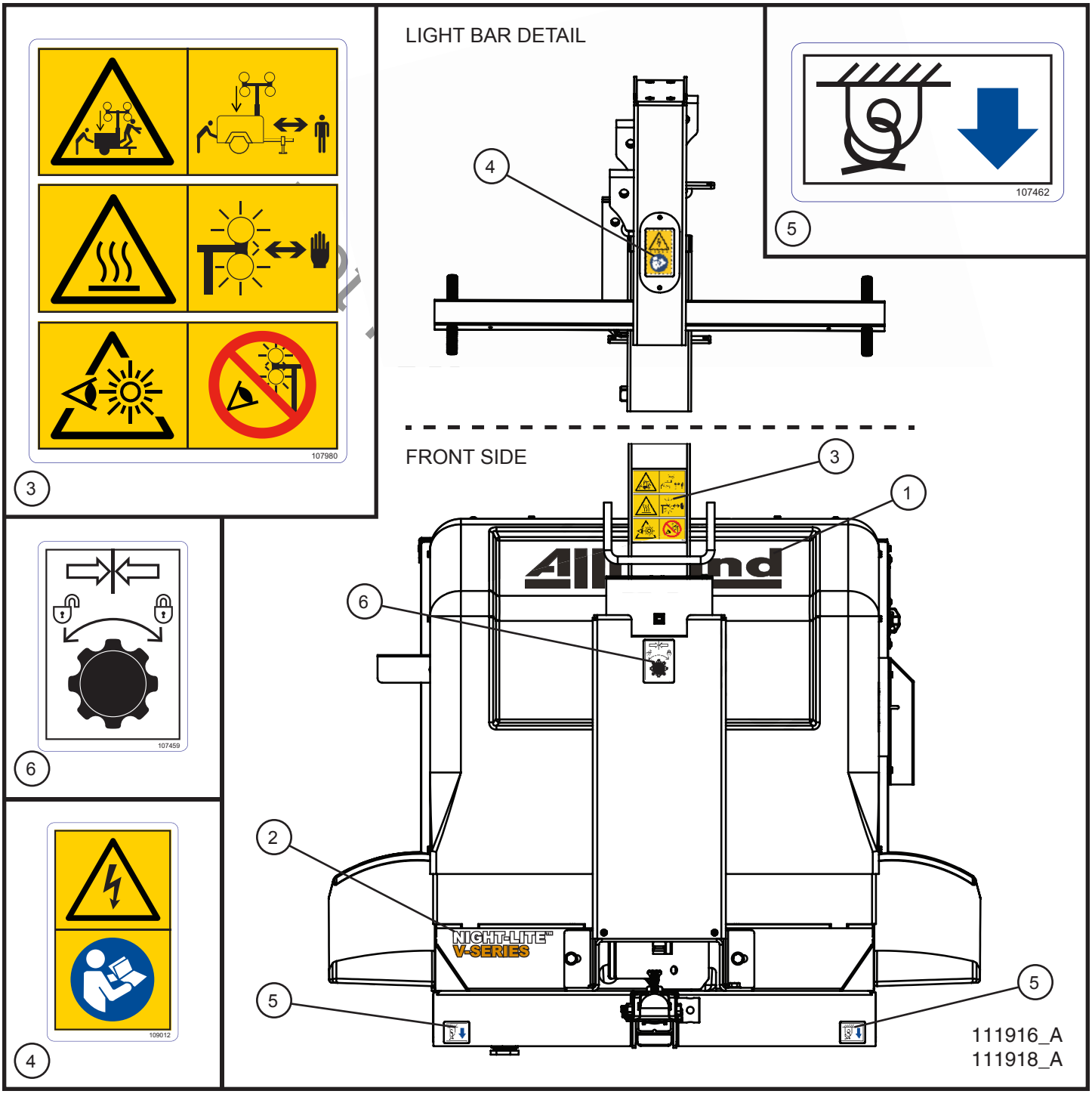

©2017 Allmand™ Bros., Inc.

8.10 - Wordless Front Side Decals

SN 39-000001 and UP

Item	Part No.	Part Description	Qty.
1	112232	ALLMAND BLACK 21 INCH DECAL	1
2	112233	NIGHT-LITE V-SERIES LEFT DECAL	1
3	107980	WORDLESS VERTICAL TOWER 3 PANEL WARNING DECAL	1
4	109012	WORDLESS HAZARDOUS VOLTAGE VERTICAL DANGER DECAL	1
5	107462	TIE DOWN POSITION DECAL	2
6	107459	TOWER ALIGNMENT DECAL	1

Not for Reproduction

©2017 Allmand™ Bros., Inc.

8.11 - Wordless Top Side Decals

SN 39-000001 and UP

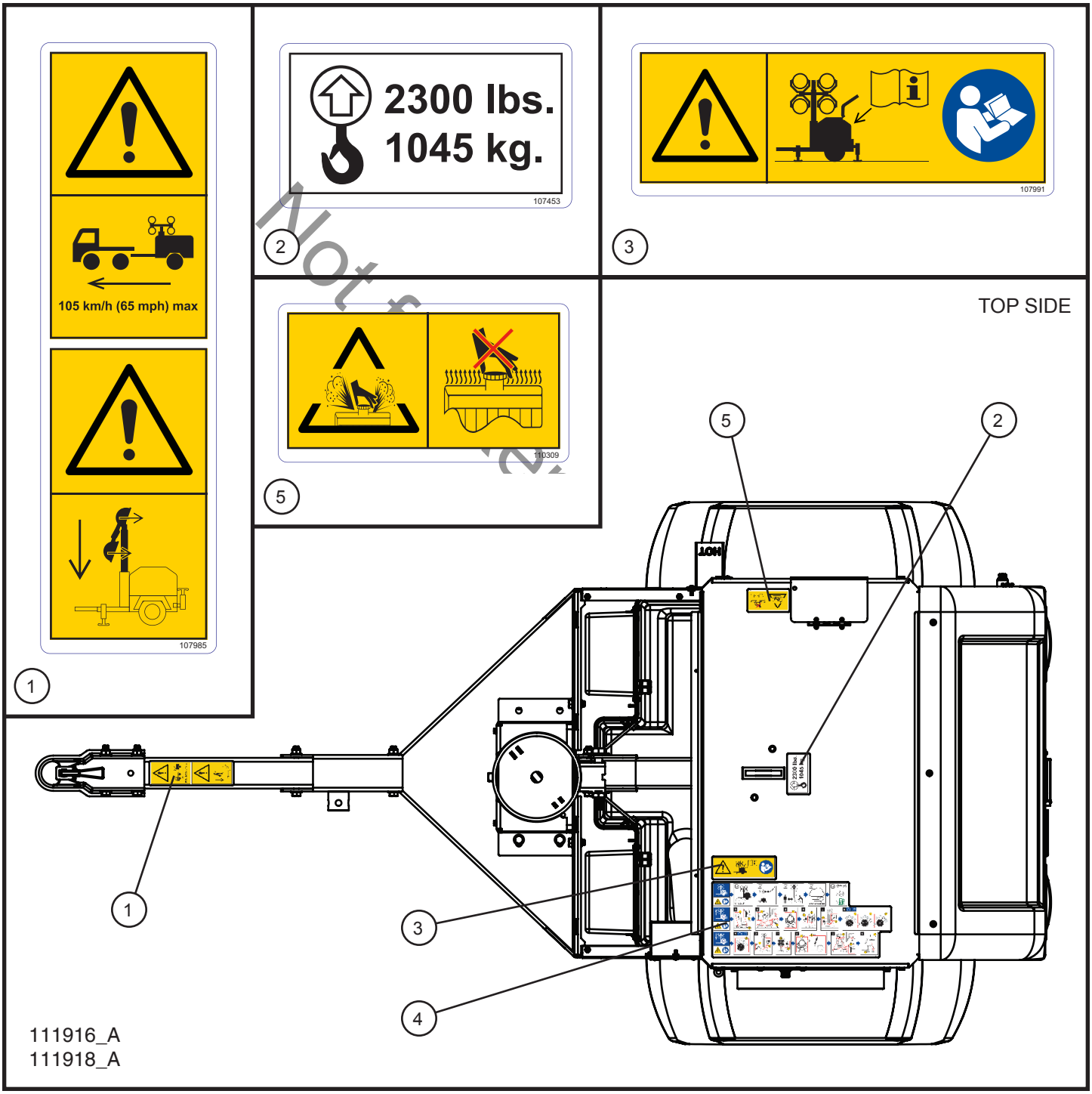

©2017 Allmand™ Bros., Inc.

8.11 - Wordless Top Side Decals

SN 39-000001 and UP

Item	Part No.	Part Description	Qty.
1	107985	WORDLESS EXCESSIVE TOWING DECAL	1
2	107453	LIFT HOOK WEIGHT DECAL	1
3	107991	WORDLESS OPERATOR WARNING DECAL	1
4	110303	MANUAL WINCH TOWER INSTRUCTIONS DECAL	1
	110304	ELECTRIC WINCH TOWER INSTRUCTIONS DECAL	1
	107256	LSC MANUAL WINCH TOWER INSTRUCTIONS DECAL	1
	107519	LSC ELECTRIC WINCH TOWER INSTRUCTIONS DECAL	1
5	110309	WORDLESS RADIATOR WARNING DECAL	1

Not for Reproduction

©2017 Allmand™ Bros., Inc.

8.12 - Wordless Interior Decals

SN 39-000001 and UP

1

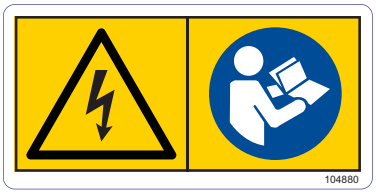

2

BREAKER BOX DETAIL

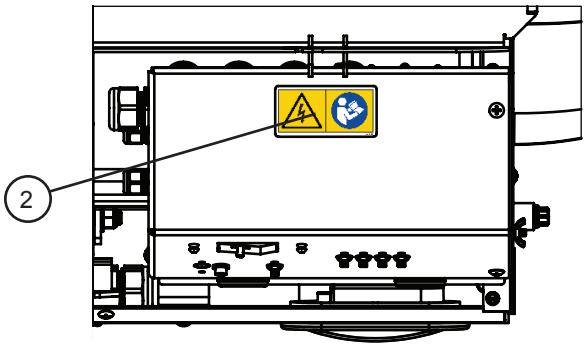

REAR DOOR
INTERIOR DETAIL

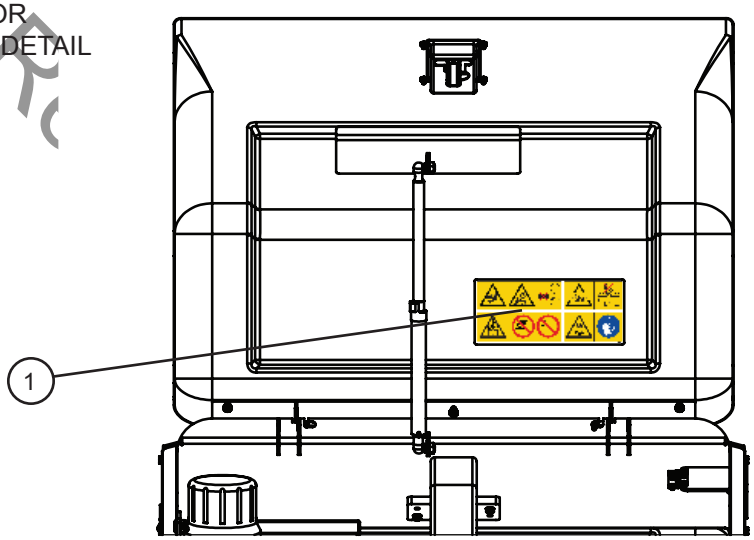

BALLAST
BOXES
DETAIL

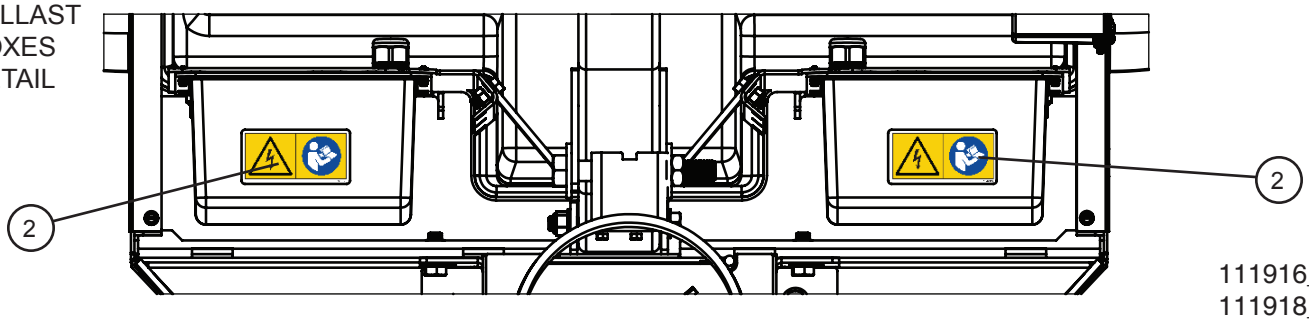

111916_A
111918_A

©2017 Allmand™ Bros., Inc.

8.12 - Wordless Interior Decals

SN 39-000001 and UP

Item	Part No.	Part Description	Qty.
1	110310	WORDLESS ENGINE-RADIATOR-BATTERY WARNING DECAL	1
2	104880	WORDLESS HAZARDOUS VOLTAGE DANGER DECAL	3

Not for Reproduction

©2017 Allmand™ Bros., Inc.

8.13 - CSA Decals

SN 39-000001 and UP

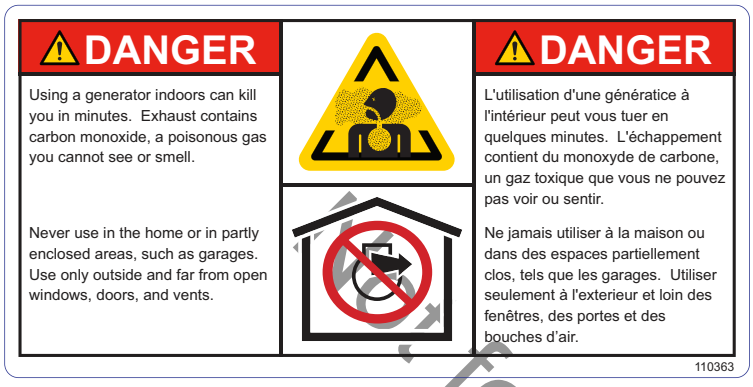

2

BREAKER BOX DETAIL

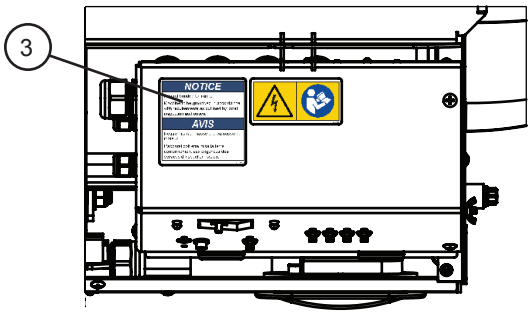

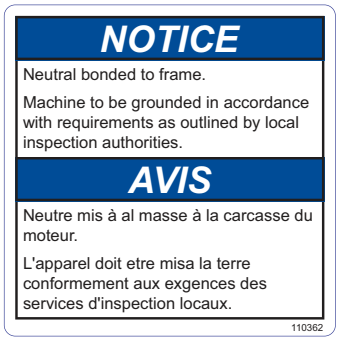

3

1

BACK SIDE

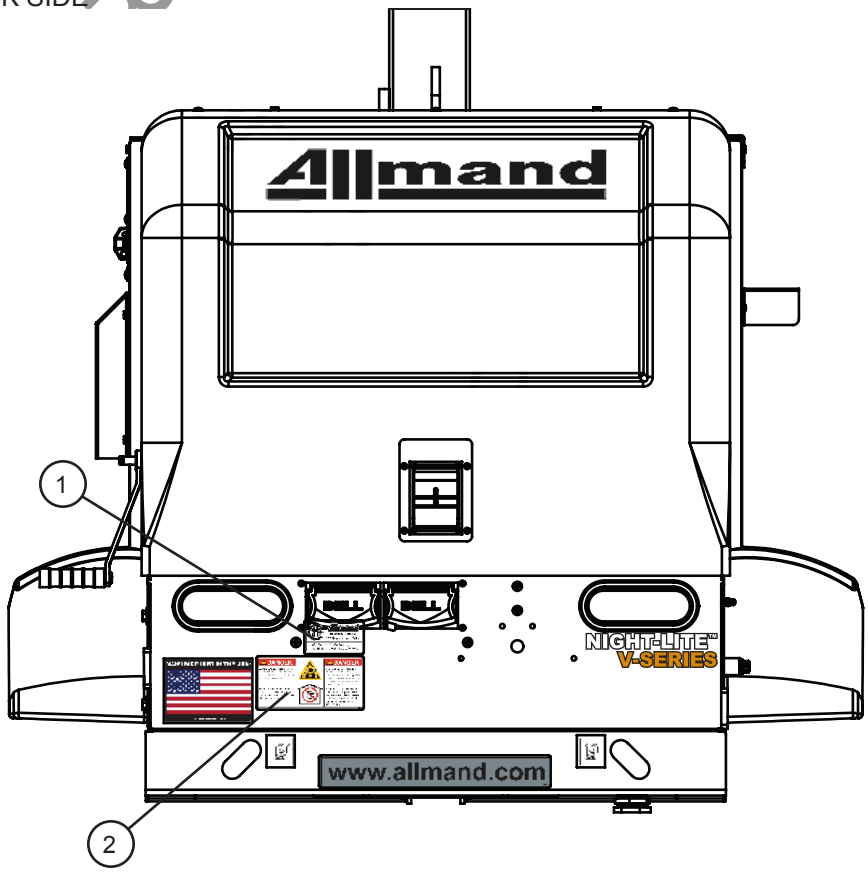

112398_A

Not for R

©2017 Allmand™ Bros., Inc.

8.13 - CSA Decals

SN 39-000001 and UP

Item	Part No.	Part Description	Qty.
1	110361	DECAL CSA MARK	1
2	110363	DECAL EXHAUST DANGER	1
3	110362	DECAL NEUTRAL / GROUNDED NOTICE	1

Not for Reproduction

©2017 Allmand™ Bros., Inc.

8.14 - Electrical Information Decals

SN 39-000001 and UP

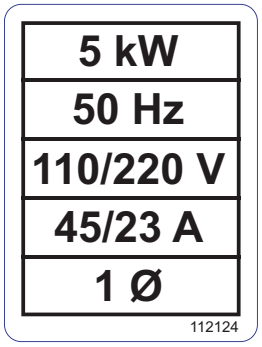

1

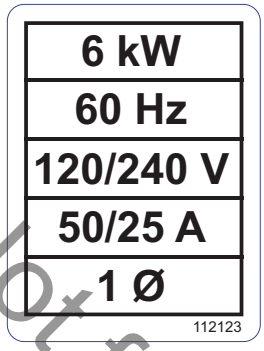

2

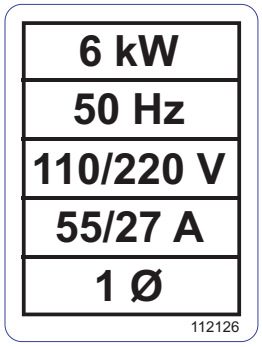

3

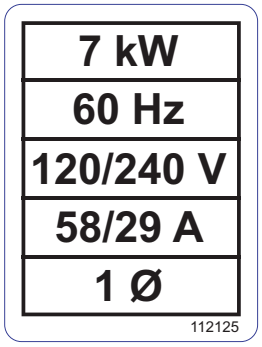

4

TOP SIDE OF
BREAKER BOX

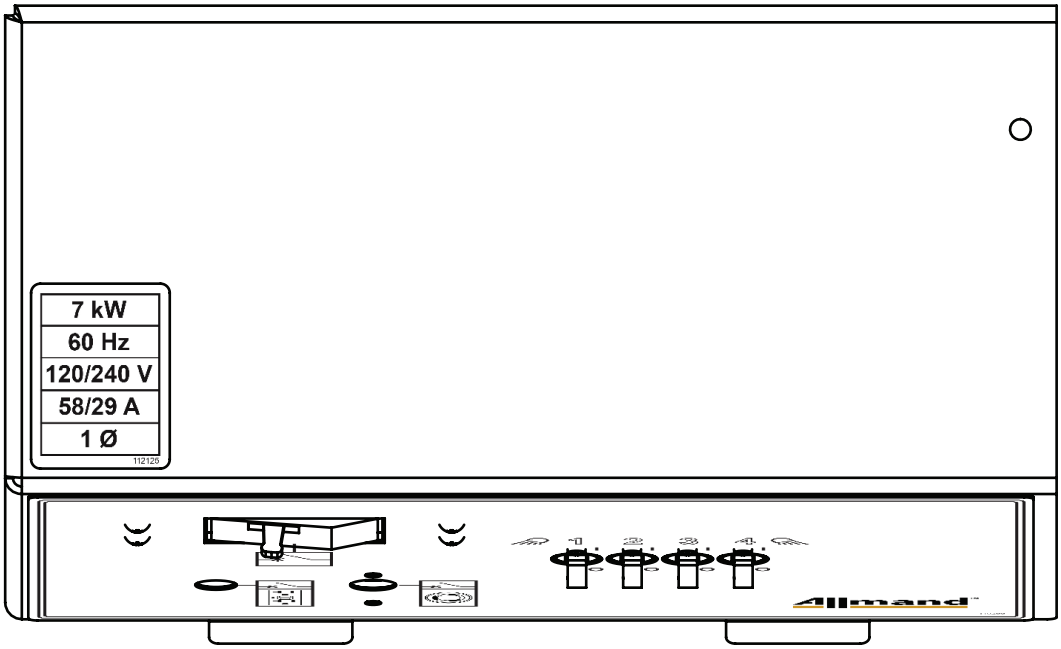

112701_A
112702_A
112703_A
112704_A

Not for Re

©2017 Allmand™ Bros., Inc.

8.14 - Electrical Information Decals

SN 39-000001 and UP

Item	Part No.	Part Description	Qty.
1	112124	DECAL ELECTRICAL INFO 5kW 50Hz 1 PHASE	1
2	112123	DECAL ELECTRICAL INFO 6kW 60Hz 1 PHASE	1
3	112126	DECAL ELECTRICAL INFO 6kW 50Hz 1 PHASE	1
4	112125	DECAL ELECTRICAL INFO 7kW 60Hz 1 PHASE	1

Not for Reproduction

©2017 Allmand™ Bros., Inc.

8.15 - LSC Autostart Decal

SN 39-000001 and UP

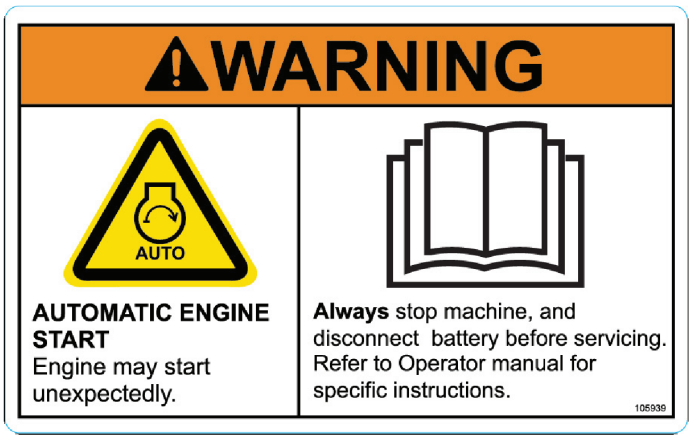

1

TOP SIDE OF BREAKER BOX

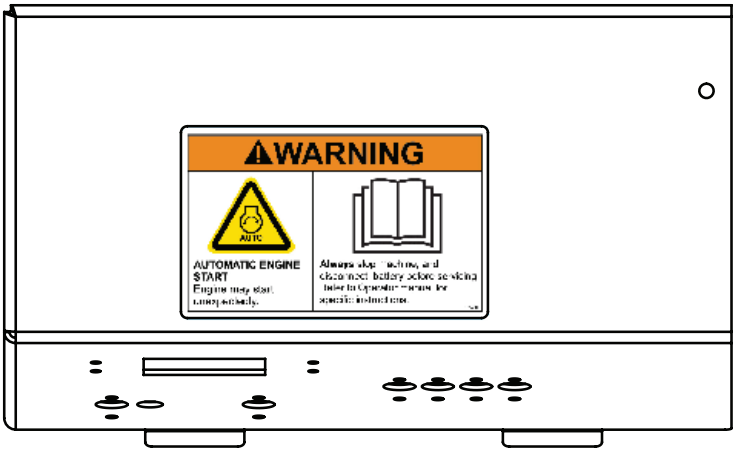

112622_A

©2017 Allmand™ Bros., Inc.

8.15 - LSC Autostart Decal

SN 39-000001 and UP

Item	Part No.	Part Description	Qty.
1	105939	LSC AUTOSTART WARNING DECAL	1

Not for Reproduction

©2017 Allmand™ Bros., Inc.

Allmand™

BRIGHTER. WARMER. SAFER.

Allmand Bros., Inc.
1502 West 4th Avenue
Holdrege, NE 68949
phone: (308) 995-4495 • toll free: (800) 562-1373
fax: (308) 995-5887

www.allmand.com

Reliability, performance, and integrity since 1938

13-0267