Parts Manual

Mfg. No: 1006-1
Megaforce 6500

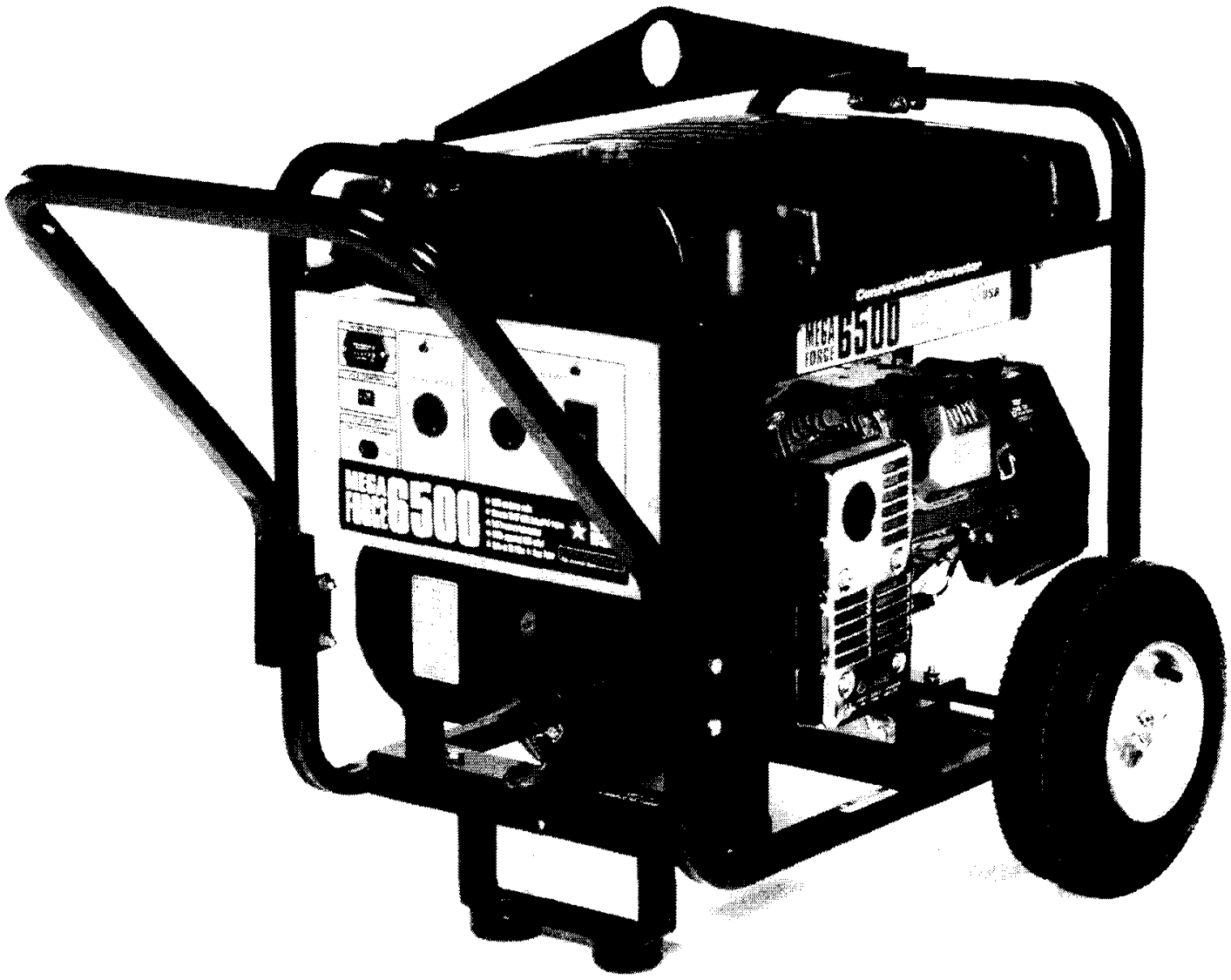

Copyright © Briggs & Stratton. All Rights reserved

Model Components

Page

Control Panel. 4
Lift/Wheel Kit. 6
Main Unit. 8
Wiring Diagram. 12
Wiring Schematic. 14
Torque Specification Chart. 16

Not For Reproduction

Copyright © Briggs & Stratton. All Rights reserved

Control Panel

Note: Unless noted otherwise, use the standard torque specifications

Mfg. No: 1006-1

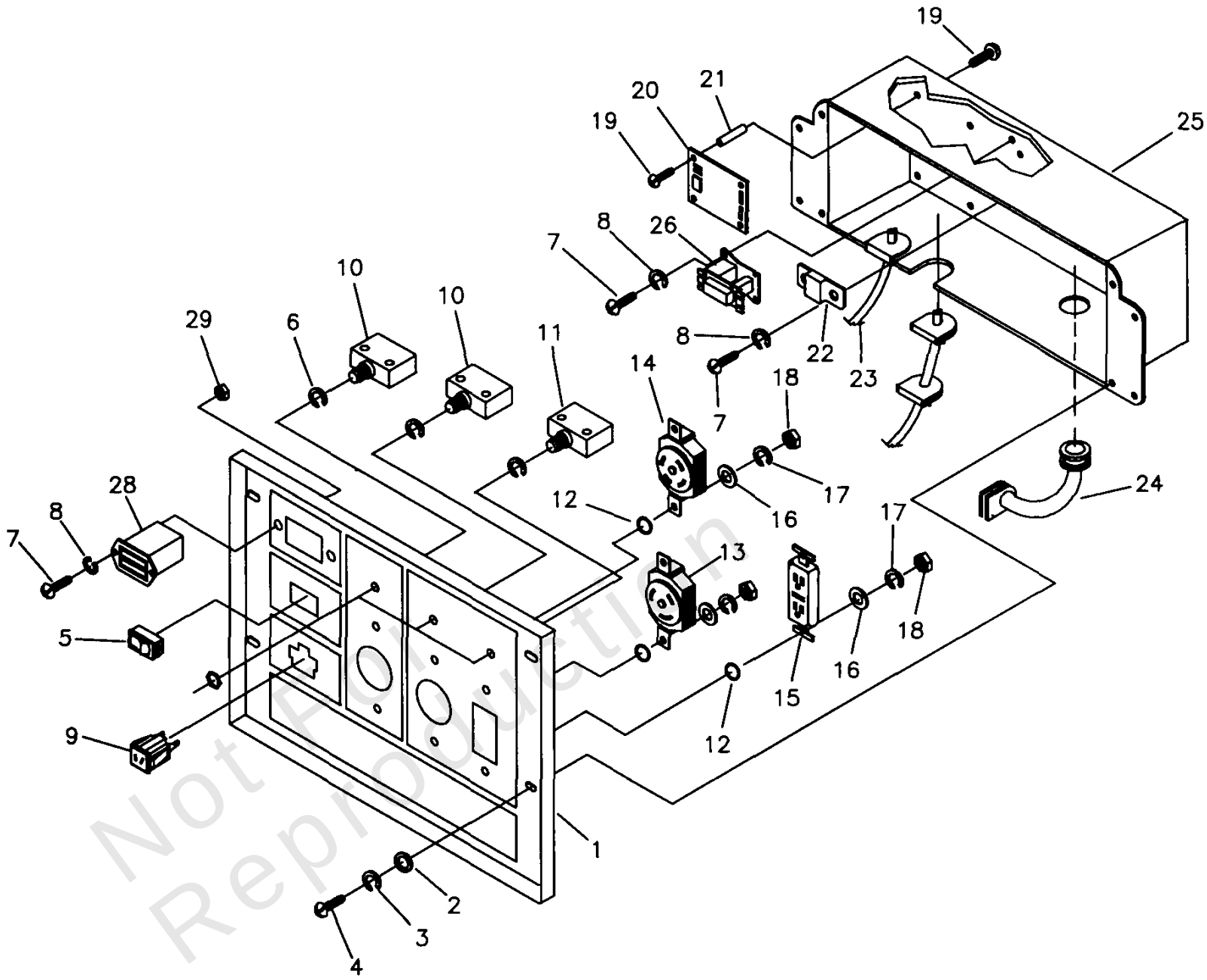

Not Authorized Reproduction

Copyright © Briggs & Stratton. All Rights reserved

Control Panel

REF NO	PART NO	QTY	DESCRIPTION
1	F92570	1	PANEL, Control
2	23897	4	FLAT WASHER, #10 M5
3	49226	4	LOCK WASHER, M5
4	91526	4	SCREW, M5-0.8 x 12 mm
5	82538	1	SWITCH, RKR On - Off
6	82881	3	LOCK WASHER, 7/16" Int.
7	43181	4	SCREW, M3 - 0.5 x 10 mm
8	43182	4	LOCK WASHER, M3
9	90418	1	OUTLET, 12 VDC Snap
10	75207-A	2	CIRCUIT BREAKER, 30 AMP
11	75207	1	CIRCUIT BREAKER, 20 AMP
12	23365	6	WASHER, #8 Shakeproof
13	68868	1	OUTLET, 30A, 120V Locking
14	43437	1	OUTLET, 30A, 120V/240V Locking
15	80409	1	RECEPTACLE, Dplx GFCI 20A
16	43180	6	FLAT WASHER, M4
17	22264	6	LOCK WASHER, #8 M4
18	51715	6	NUT, M4 - 0.7 Hex
19	64526	8	SCREW, #6-32 x 3/8"
20	83970	1	BOARD, System Control
21	64525	4	3/4" Hex Standoff
22	87962	1	CIRCUIT BREAKER, 10A (automatic), 12V
23	84335	1	ASSEMBLY, Wire Harness
24	84134	1	GROMMET, Rubber Connector
25	B92069	1	BOX, Control Panel
26	84028	1	TRANSFORMER, Idle Control
28	77604	1	HOURMETER
29	51714	2	NUT, M3 - 0.5 Hex

Not For Reproduction

Copyright © Briggs & Stratton. All Rights reserved

Lift/Wheel Kit

Note: Unless noted otherwise, use the standard torque specifications

Mfg. No: 1006-1

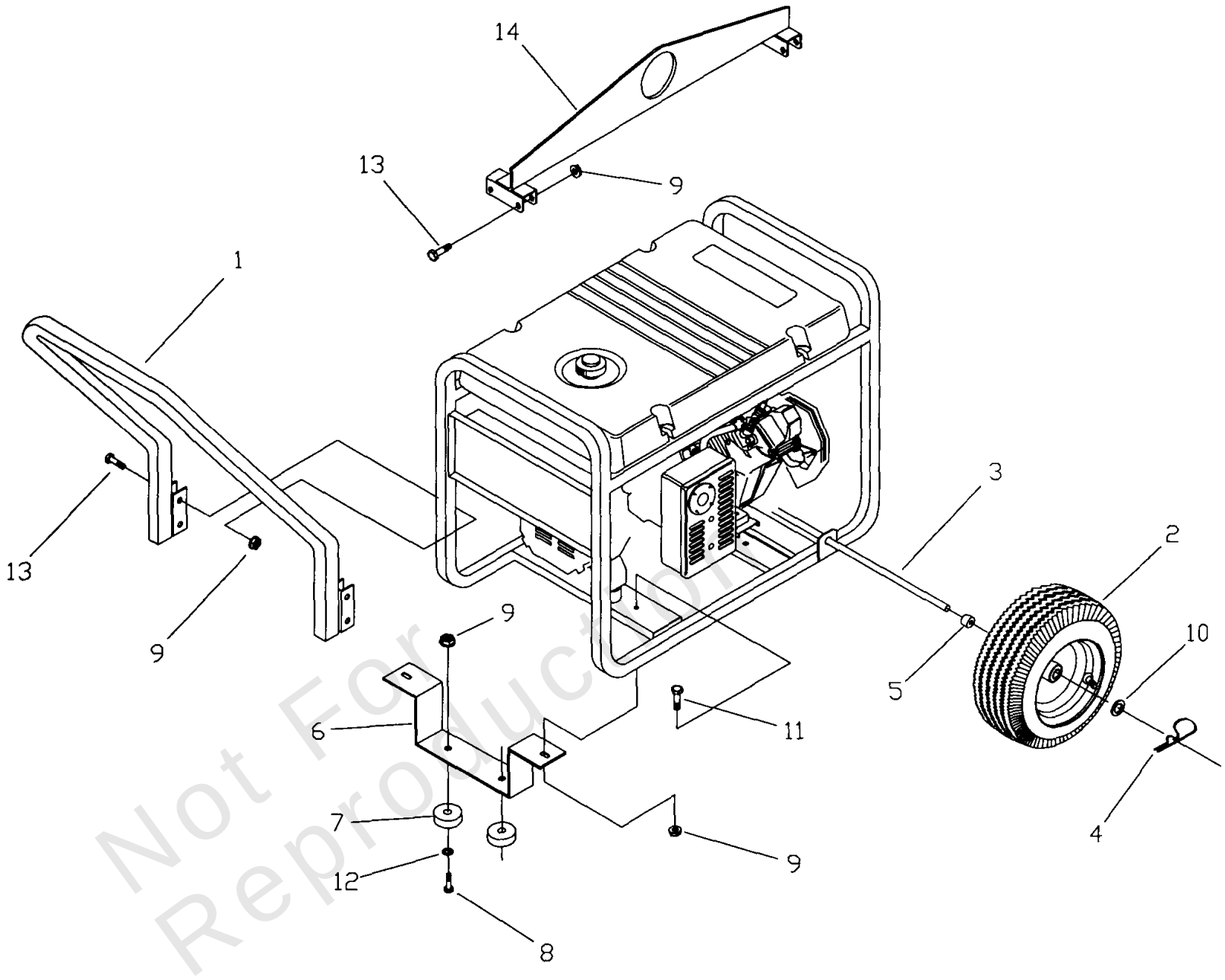

Not For Reproduction

Copyright © Briggs & Stratton. All Rights reserved

Lift/Wheel Kit

REF NO	PART NO	QTY	DESCRIPTION
1	B93393A	1	HANDLE
2	89742	2	WHEEL, 12" Dia.
3	93693A	1	AXLE
4	87005	2	PIN, Quick Release 1/4"
5	B89635	2	SPACER, Wheel
6	B93696	1	BRACKET, Support Leg
7	27007	2	MOUNT, Vibration
8	42909	2	CAPSCREW, Hex Hd. M8 - 1.25 x 30
9	52858	12	NUT, Lock M8
10	22247	2	WASHER, Wheel
11	39253	2	CAPSCREW, Hex Hd. - M8 - 1.25 x 20
12	-----	2	WASHER, Flat, 5/16
13	B1214	8	HHCS, M8 - 1.25 x 45 GR 10.9
14	BB1212	1	ASSEMBLY, Lift Kit

Not For Reproduction

Copyright © Briggs & Stratton. All Rights reserved

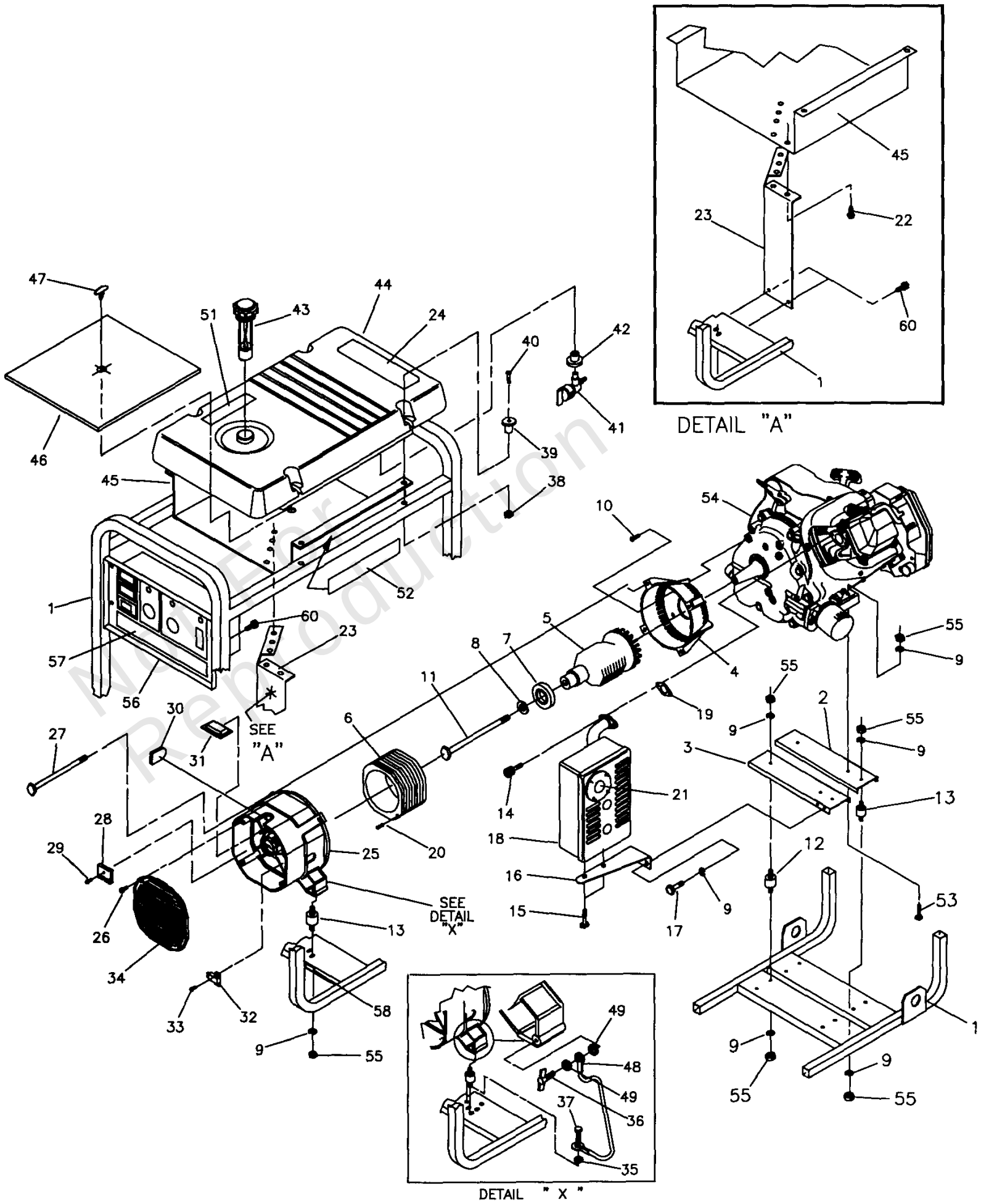

Not For Reproduction

Main Unit

REF NO	PART NO	QTY	DESCRIPTION
1	B92432	1	CRADLE
2	B92531	1	SUPPORT, Engine
3	B92731	1	SUPPORT, Engine & Muffler
4	92247	1	HOUSING, Engine Adapter
5	92679G	1	ASSEMBLY, Rotor
6	92681G	1	ASSEMBLY, Stator
7	65791	1	BEARING
8	67451	1	WASHER, M8 Flat
9	22129	12	WASHER, M8 Lock
10	86307	4	SCREW, 5/16-24 x 3/4 Mach.
11	25254	1	SCREW, 5/16-24 x 9-7/8"
12	92609	2	MOUNT, Vibration
13	82857	4	MOUNT, Vibration
14	40976	2	SCREW, M8 - 1.25 x 20
15	66476	2	CAPSCREW, M6 - 1.0 x 12mm
16	92532	1	BRACKET, Muffler
17	22142	2	SCREW, 5/16 - 18 x 3/4"
18	A7433	1	MUFFLER
19	90239	1	GASKET, Muffler
20	81917	1	PIN, 4mm x 10 Roll
21	83083	1	SCREEN, Spark Arrest
22	56893	5	SCREW, 10-24 x 1/2 Crimptite
23	B96068	1	SHIELD, Heat
24	93826	1	DECAL, Start Instructions
25	66825C	1	CARRIER, Rear Bearing
26	74908	4	TAPTITE, M5-0.8 x 10
27	86308B	4	BOLT, M6-1 x 165mm Stator
28	65795	1	RECTIFIER, Battery Charge
29	66849A	1	TAPTITE, M5-0.8 x 20
30	67022	1	GROMMET, Rubber
31	84132	1	ASSEMBLY, Power Regulator
32	66386	1	ASSEMBLY, Brush Holder
33	66849	2	TAPTITE, M5-0.8 x 16
34	B4871	1	COVER, Bearing Carrier
35	22769	1	WASHER, #10 Int. Shakeproof
36	86494	1	SCREW, M6-1.0 x 16 Wing
37	86292	1	SCREW, #10 Self Drilling
38	77395	4	NUT, M6 Flange Lock
39	83465	4	GROMMET, Tank
40	78831B	4	HHMS, M6-1.0 x 60, SEMS
41	80270	1	VALVE, Tank
42	78299	1	BUSHING, Plastic Tank
43	B4363	1	CAP, Fuel
44	B1998	1	TANK, Fuel
45	B92039	1	SHIELD, Heat
46	92665	1	INSULATION, #2-1/4"
47	85000	1	CLIP, Insulation
48	143-53621	1	WIRE, Ground
49	-----	2	WASHER, M6 Shakeproof
51	92982	1	DECAL, Danger
52	B4377	2	DECAL, Heat Shield

Not For Reproduction

Copyright © Briggs & Stratton. All Rights reserved

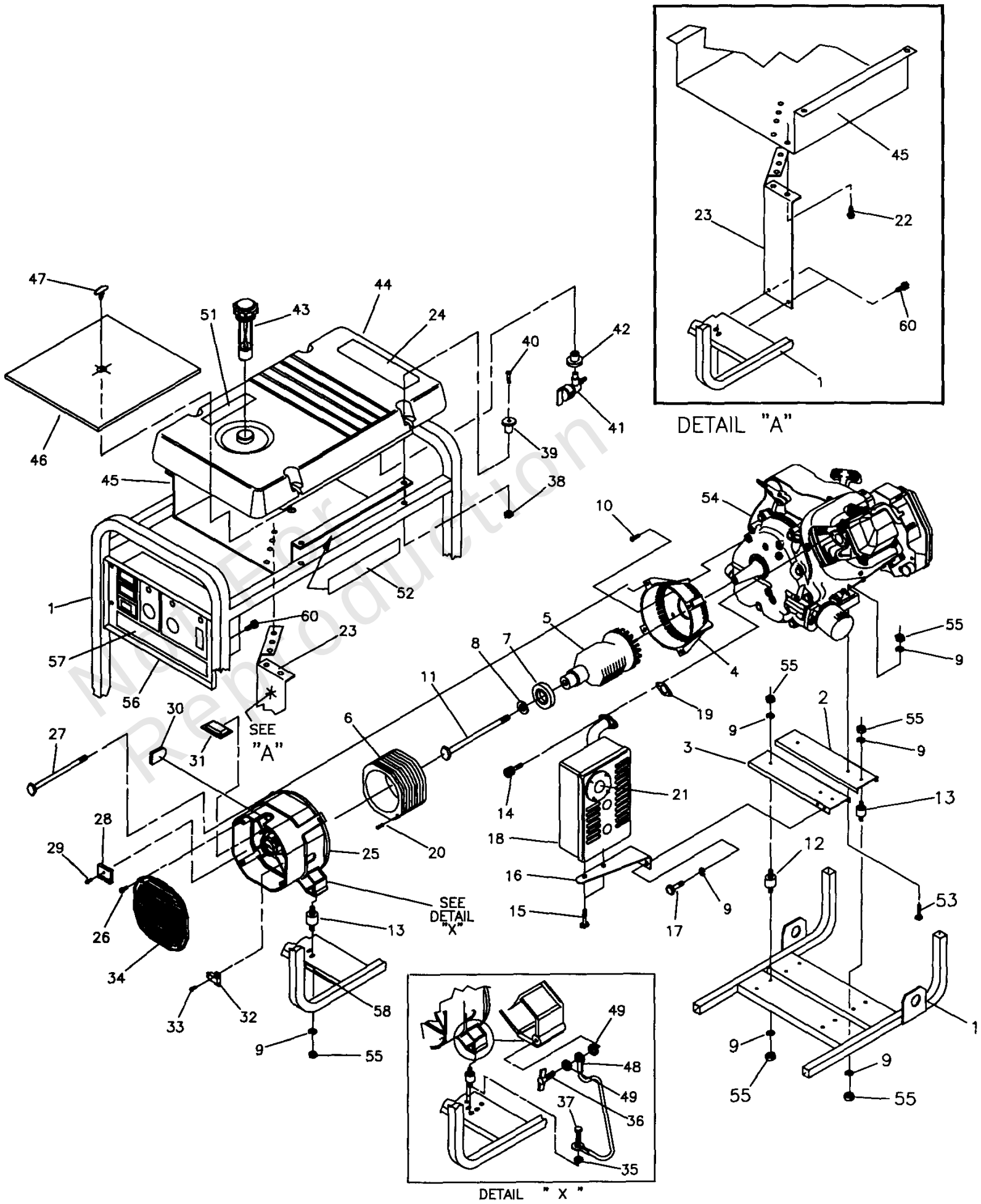

Not For Reproduction

Main Unit

REF NO	PART NO	QTY	DESCRIPTION
53	22531	2	HHCS, 5/16-18 x 1-3/4
54	~NSP	1	ENGINE
55	25244	12	NUT, 5/16-18 Hex
56	92631	1	ASSEMBLY, Control Box
57	B4378	1	DECAL, Control Panel
58	B4986	1	DECAL, Ground
60	B2153	6	SCREW, Self Drill 12-14 x 7/8"
	65787	1	Battery Charge Cable -Accessory (Not Illustrated)
	~NSP	1	Engine Manual -Accessory (Not Illustrated)
	37806	1	120 Volt 30 Amp Plug -Accessory (Not Illustrated)
	43438	1	120/240 Volt 30 Amp Plug -Accessory (Not Illustrated)
	B4379	1	Owner's Manual -Accessory (Not Illustrated)
	65787	1	Battery Charge Cable -Accessory (Not Illustrated)
	72347	1	Spark Plug -Accessory (Not Illustrated)
	73111	1	Paper Air Cleaner -Accessory (Not Illustrated)
	84882	1	Spark Plug Wrench -Accessory (Not Illustrated)
	BB3061	2	Oil Bottle -Accessory (Not Illustrated)
	84883		Cord Wrap -Optional Accessory Not Included

Not For Reproduction

Note: Unless noted otherwise, use the standard torque specifications Mfg. No: 1006-1

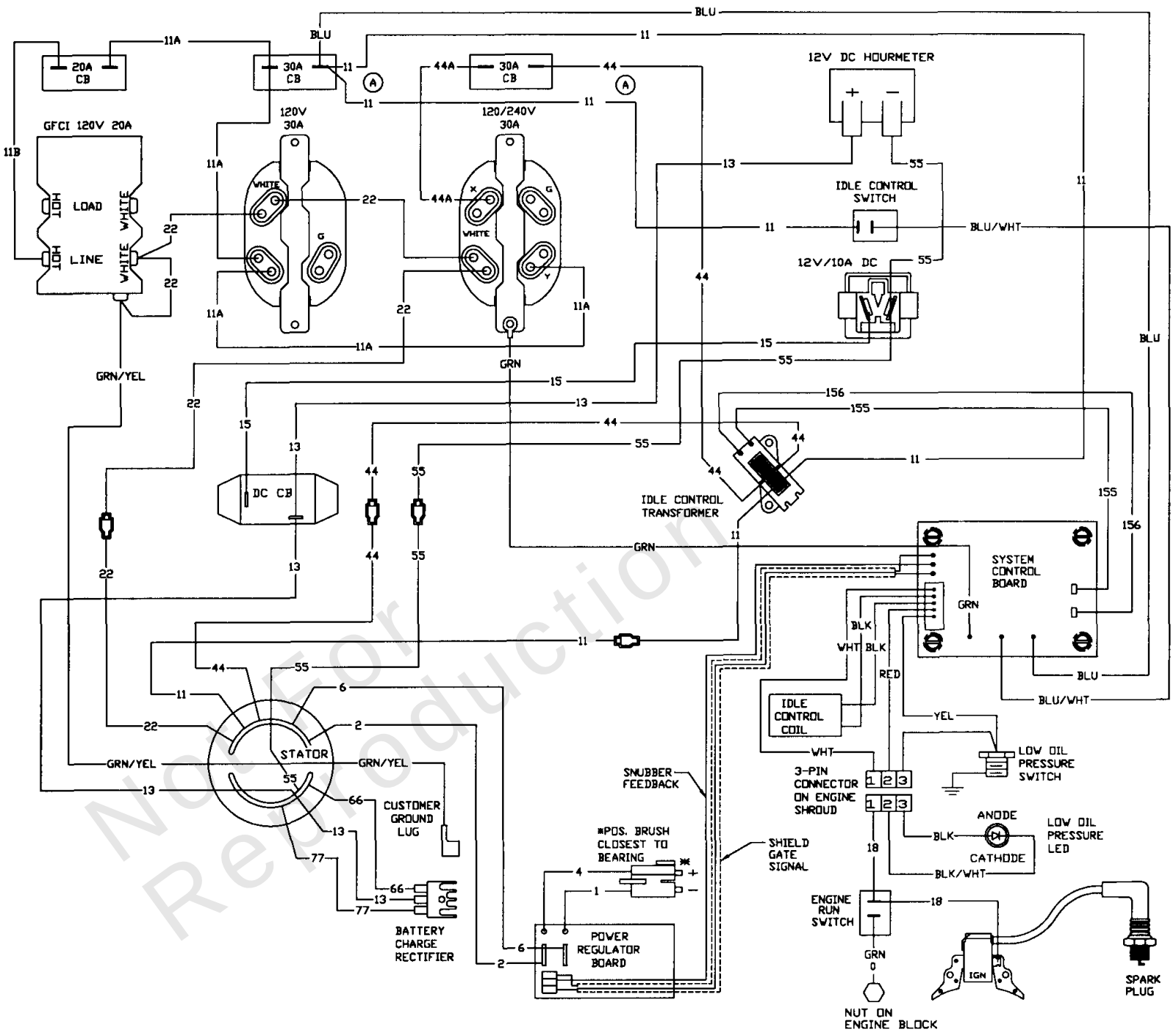

Not For Reproduction

Wiring Diagram

REF NO	PART NO	QTY	DESCRIPTION
--	-----		Wiring Diagram Only
--	-----		WARNING - Generator Voltage Could Cause Electrical Shock or Burn Resulting in Death Or Serious Injury. To Avoid Electrical Shock Or Burn Hazard, Please Refer Service To Qualified Personnel.

Not For Reproduction

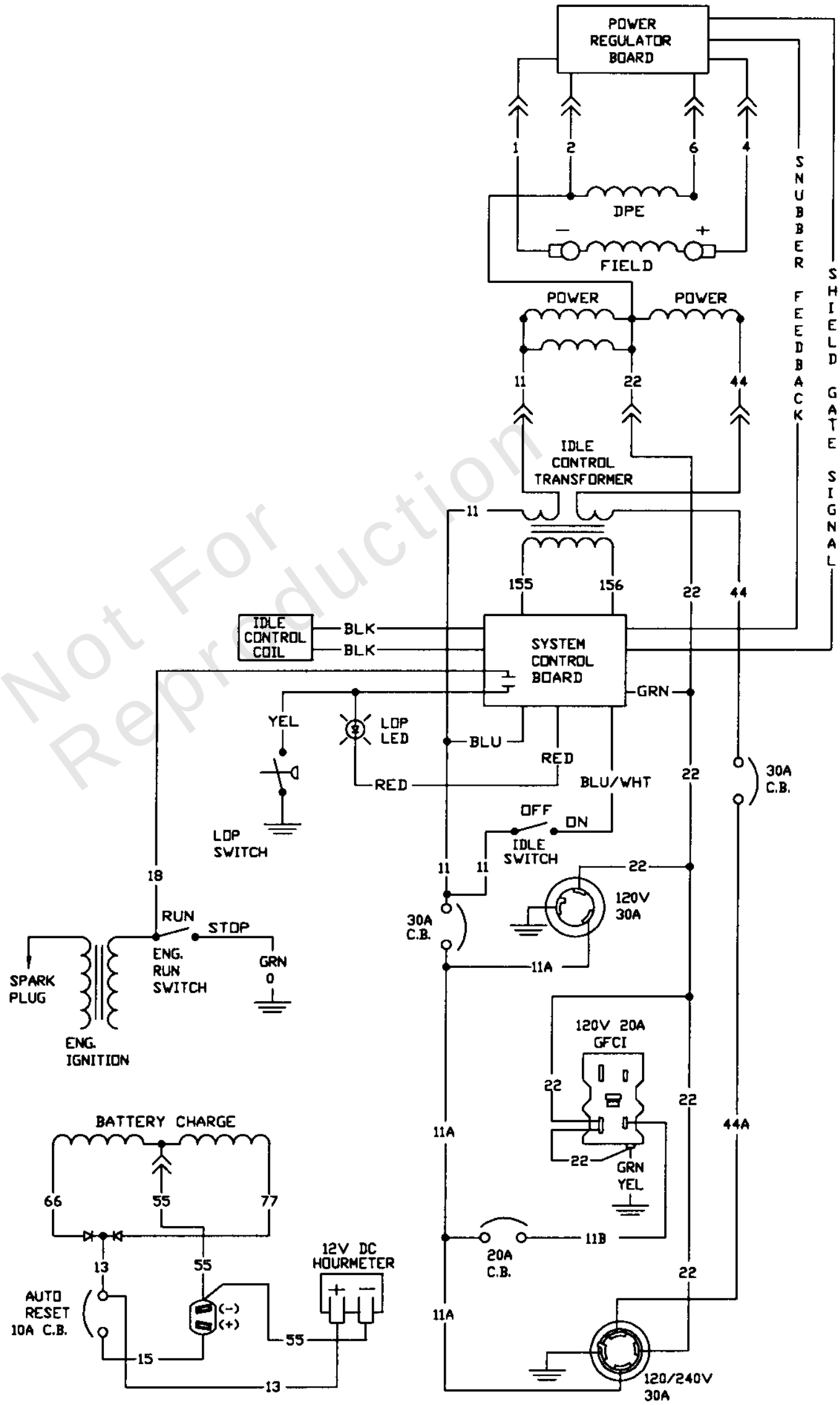

Not For Reproduction

Wiring Schematic

REF NO	PART NO	QTY	DESCRIPTION
--	-----		Wiring Schematic Only
--	-----		WARNING - Generator Voltage Could Cause Electrical Shock or Burn Resulting in Death Or Serious Injury. To Avoid Electrical Shock Or Burn Hazard, Please Refer Service To Qualified Personnel.

Not For Reproduction

Hardware Identification & Torque Specifications

Torque Specification Chart

FOR STANDARD METRIC MACHINE HARDWARE (Tolerance ± 20%)

Property Class	5.6 Class 5.6		8.8 Class 8.8		10.9 Class 10.9		12.9 Class 12.9	
Size Of Hardware	*in/lbs* **ft/lbs**	Nm.	*in/lbs* **ft/lbs**	Nm.	*in/lbs* **ft/lbs**	Nm.	*in/lbs* **ft/lbs**	Nm.
M3	*5.88*	*.56*	*13.44*	*1.28*	*19.2*	*1.80*	*22.92*	2.15
M4	*13.44*	*1.28*	*30.72*	*2.90*	*43.44*	*4.10*	*52.56*	4.95
M5	*26.4*	*2.50*	*60.96*	*5.75*	**5.97**	*8.10*	**7.15**	9.7
M6	*44.64*	*4.3*	**7.3**	*9.9*	**10.3**	*14*	**12.1**	16.5
M7	**5.2**	*7.1*	**12.1**	*16.5*	**16.9**	*23*	**19.9**	27
M8	**7.7**	*10.5*	**17.7**	*24*	**25**	*34*	**29**	40
M10	**15**	*21*	**35**	*48*	**50**	*67*	**59**	81
M12	**26**	*36*	**61**	*83*	**86.2**	*117*	**103**	140
M14	**42**	*58*	**101**	*132*	**136**	*185*	**162**	220
M16	**64**	*88*	**147**	*200*	**210**	*285*	**250**	340
M18	**89**	*121*	**202**	*275*	**287**	*390*	**346**	470
M20	**126**	*171*	**290**	*390*	**405**	*550*	**486**	660
M22	**169**	*230*	**390**	*530*	**559**	*745*	**656**	890
M24	**217**	*295*	**497**	*375*	**708**	*960*	**840**	1140
M27	**320**	*435*	**733**	*995*	**1032**	*1400*	**1239**	1680
M30	**435**	*590*	**995**	*1350*	**1401**	*1900*	**1681**	2280
M33	**590**	*800*	**1349**	*1830*	**1902**	*2580*	**2278**	3090
M36	**759**	*1030*	**1740**	*2360*	**2441**	*3310*	**2935**	3980
M39	**988**	*1340*	**2249**	*3050*	**3163**	*4290*	**3798**	5150

The guides and ruler furnished below are designed to help you select the appropriate hardware.

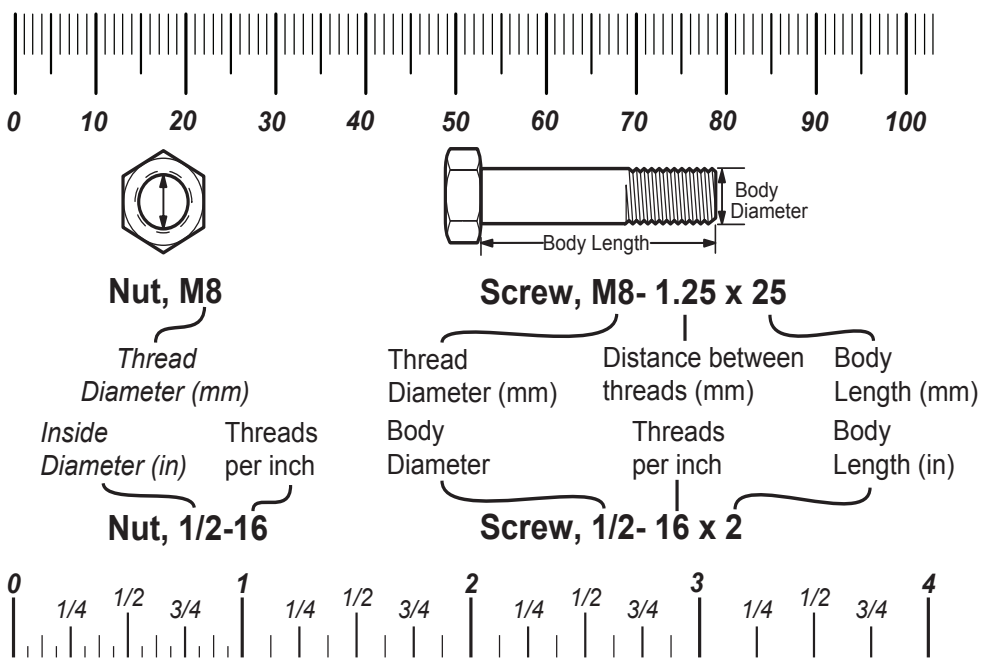

Standard Hardware Sizing

When a washer or nut is identified as **1/2"** (M8), this is the *Nominal size*, meaning the *inside diameter* is 1/2 inch (8mm metric thread diameter); if a second number is present it represents the *threads per inch* (distance between threads).

When bolt or capscrew is identified as **1/2 - 16 x 2"** (M8 - 1.25 x 50), this means the *Nominal size*, or body diameter is 1/2 inch (8mm metric thread diameter), the second number,16, represents the *threads per inch, (distance between threads).* The final number is the body length of the bolt or screw, 2 inches (50mm).

Torque Specification Chart

FOR STANDARD MACHINE HARDWARE (Tolerance ± 20%)

Hardware Grade	No Marks SAE Grade 2		SAE Grade 5		SAE Grade 8	
Size Of Hardware	*in/lbs* **ft/lbs**	Nm.	*in/lbs* **ft/lbs**	Nm.	*in/lbs* **ft/lbs**	Nm.
8-32	*19*	2.1	*30*	3.4	*41*	4.6
8-36	*20*	2.3	*31*	3.5	*43*	4.9
10-24	*27*	3.1	*43*	4.9	*60*	6.8
10-32	*31*	3.5	*49*	5.5	*68*	7.7
1/4-20	*66*	7.6	**8**	10.9	**12**	16.3
1/4-28	*76*	8.6	**10**	13.6	**14**	19.0
5/16-18	**11**	15.0	**17**	23.1	**25**	34.0
5/16-24	**12**	16.3	**19**	25.8	**29**	34.0
3/8-16	**20**	27.2	**30**	40.8	**45**	61.2
3/8-24	**23**	31.3	**35**	47.6	**50**	68.0
7/16-14	**30**	40.8	**50**	68.0	**70**	95.2
7/16-20	**35**	47.6	**55**	74.8	**80**	108.8
1/2-13	**50**	68.0	**75**	102.0	**110**	149.6
1/2-20	**55**	74.8	**90**	122.4	**120**	163.2
9/16-12	**65**	88.4	**110**	149.6	**150**	204.0
9/16-18	**75**	102.0	**120**	163.2	**170**	231.2
5/8-11	**90**	122.4	**150**	204.0	**220**	299.2
5/8-18	**100**	136	**180**	244.8	**240**	326.4
3/4-10	**160**	217.6	**260**	353.6	**386**	525.0
3/4-16	**180**	244.8	**300**	408.0	**420**	571.2
7/8-9	**140**	190.4	**400**	544.0	**600**	816.0
7/8-14	**155**	210.8	**440**	598.4	**660**	897.6
1-8	**220**	299.2	**580**	788.8	**900**	1,244.0
1-12	**240**	326.4	**640**	870.4	**1,000**	1,360.0

NOTES

1. These torque values are to be used for all hardware excluding: locknuts, self-tapping screws, thread forming screws, sheet metal screws and socket head setscrews.
2. Recommended seating torque values for locknuts:
   a. for prevailing torque locknuts - use 65% of grade 5 torques.
   b. for flange whizlock nuts and screws - use 135% of grade 5 torques.
3. Unless otherwise noted on assembly drawings, all torque values must meet this specification.

Common Hardware Types

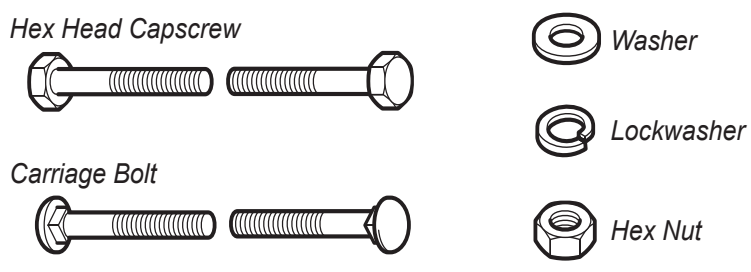

Wrench & Fastener Size Guide

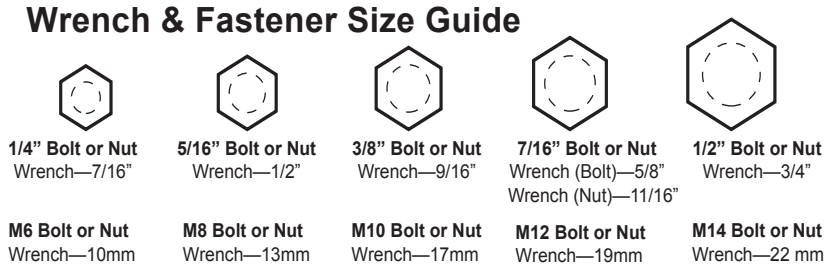

Copyright © Briggs & Stratton. All Rights reserved